EC21 Series Mini PCIe

Hardware Design

LTE Standard Module Series

Version: 1.5

Date: 2021-08-20

Status: Released

Our aim is to provide customers with timely and comprehensive service. For any assistance, please contact our company headquarters:

Quectel Wireless Solutions Co., Ltd.
Building 5, Shanghai Business Park Phase III (Area B), No.1016 Tianlin Road, Minhang District, Shanghai 200233, China
Tel: +86 21 5108 6236
Email: info@ quectel.com

Or our local office. For more information, please visit:
http://www.quectel.com/support/sales.htm.

For technical support, or to report documentation errors, please visit:
http://www.quectel.com/support/technical.htm
Or email to support@ quectel.com.

General Notes

Quectel offers the information as a service to its customers. The information provided is based upon customers' requirements. Quectel makes every effort to ensure the quality of the information it makes available. Quectel does not make any warranty as to the information contained herein, and does not accept any liability for any injury, loss or damage of any kind incurred by use of or reliance upon the information. All information supplied herein is subject to change without prior notice.

Disclaimer

While Quectel has made efforts to ensure that the functions and features under development are free from errors, it is possible that these functions and features could contain errors, inaccuracies and omissions. Unless otherwise provided by valid agreement, Quectel makes no warranties of any kind, implied or express, with respect to the use of features and functions under development. To the maximum extent permitted by law, Quectel excludes all liability for any loss or damage suffered in connection with the use of the functions and features under development, regardless of whether such loss or damage may have been foreseeable.

Duty of Confidentiality

The Receiving Party shall keep confidential all documentation and information provided by Quectel, except when the specific permission has been granted by Quectel. The Receiving Party shall not access or use Quectel's documentation and information for any purpose except as expressly provided herein. Furthermore, the Receiving Party shall not disclose any of the Quectel's documentation and information to any third party without the prior written consent by Quectel. For any noncompliance to the above requirements, unauthorized use, or other illegal or malicious use of the documentation and information, Quectel will reserve the right to take legal action.

Copyright

The information contained here is proprietary technical information of Quectel. Transmitting, reproducing, disseminating and editing this document as well as using the content without permission are forbidden. Offenders will be held liable for payment of damages. All rights are reserved in the event of a patent grant or registration of a utility model or design.

Copyright © Quectel Wireless Solutions Co., Ltd. 2021. All rights reserved.

Safety Information

The following safety precautions must be observed during all phases of operation, such as usage, service or repair of any cellular terminal or mobile incorporating the module. Manufacturers of the cellular terminal should notify users and operating personnel of the following safety information by incorporating these guidelines into all manuals of the product. Otherwise, Quectel assumes no liability for customers' failure to comply with these precautions.

	Full attention must be paid to driving at all times in order to reduce the risk of an accident. Using a mobile while driving (even with a handsfree kit) causes distraction and can lead to an accident. Please comply with laws and regulations restricting the use of wireless devices while driving.
	Switch off the cellular terminal or mobile before boarding an aircraft. The operation of wireless appliances in an aircraft is forbidden to prevent interference with communication systems. If there is an Airplane Mode, it should be enabled prior to boarding an aircraft. Please consult the airline staff for more restrictions on the use of wireless devices on an aircraft.
	Wireless devices may cause interference on sensitive medical equipment, so please be aware of the restrictions on the use of wireless devices when in hospitals, clinics or other healthcare facilities.
	Cellular terminals or mobiles operating over radio signal and cellular network cannot be guaranteed to connect in certain conditions, such as when the mobile bill is unpaid or the (U)SIM card is invalid. When emergency help is needed in such conditions, use emergency call if the device supports it. In order to make or receive a call, the cellular terminal or mobile must be switched on in a service area with adequate cellular signal strength. In an emergency, the device with emergency call function cannot be used as the only contact method considering network connection cannot be guaranteed under all circumstances.
	The cellular terminal or mobile contains a transceiver. When it is ON, it receives and transmits radio frequency signals. RF interference can occur if it is used close to TV sets, radios, computers or other electric equipment.
	In locations with explosive or potentially explosive atmospheres, obey all posted signs and turn off wireless devices such as mobile phone or other cellular terminals. Areas with explosive or potentially explosive atmospheres include fuelling areas, below decks on boats, fuel or chemical transfer or storage facilities, and areas where the air contains chemicals or particles such as grain, dust or metal powders.

About the Document

Revision History

Version	Date	Author	Description
1.0	2016-06-07	Yeoman CHEN/ Frank WANG	Initial
1.1	2017-01-24	Lyndon LIU/ Rex WANG	1. Deleted description of EC21-AUTL and EC21-CT Mini PCIe in Table 1. 2. Updated key features of EC21 Mini PCIe in Table 2. 3. Added current consumption of EC21 Mini PCIe in Chapter 4.7. 4. Updated mechanical dimensions of EC21 Mini PCIe in Figure 15. 5. Updated conducted RF output power in Table 16. 6. Updated conducted RF receiving sensitivity of EC21-A in Table 18. 7. Added conducted RF receiving sensitivity of EC21-KL in Table 21. 8. Added conducted RF receiving sensitivity of EC21-J in Table 22.
1.2	2019-04-30	Woody WU/ Nathan LIU/ Frank WANG	1. Added new variants EC21-EU Mini PCIe/EC21-EC Mini PCIe and related information. 2. Added pin definition and description of pin 44 in Figure 2 and Table 4. 3. Updated mechanical dimensions in Figure 18. 4. Added USIM_PRESENCE in (U)SIM interface and updated the reference circuit in Chapter 3.4. 5. Updated reference circuit of USB interface in Chapter 3.5. 6. Modified description of W_DISABLE# signal in Chapter 3.8.3. 7. Modified description of LED_WWAN# signal in Chapter 3.8.5. 8. Added thermal consideration in Chapter 6.7.

			9. Updated UMTS and GSM features and added storage temperature range in Table 2. 10. Added operating frequencies in Table 15 11. Added GNSS frequency in Table 16. 12. Updated antenna requirements in Table 17. 13. Updated EC21 Mini PCIe conducted RF output power in Table 20. 14. Updated conducted RF receiving sensitivity of EC21-E Mini PCIe in Table 21. 15. Updated conducted RF receiving sensitivity of EC21-A Mini PCIe in Table 22. 16. Updated conducted RF receiving sensitivity of EC21-V Mini PCIe in Table 23 17. Updated conducted RF receiving sensitivity of EC21-AUT Mini PCIe in Table 24. 18. Added conducted RF receiving sensitivity of EC21-AU Mini PCIe in Table 27. 19. Added conducted RF receiving sensitivity of EC21-EU Mini PCIe in Table 28. 20. Added conducted RF receiving sensitivity of EC21-EC Mini PCIe in Table 29. 21. Added current consumption of EC21-EC Mini PCIe in Table 34.
1.3	2019-08-19	Ward WANG/ Owen WEI	1. Deleted the information of GNSS supported on EC21-EC Mini PCIe in Table 1. 2. Added ThreadX variant EC21-AUX Mini PCIe and updated related contents in Table 1. 3. Updated supported protocols and USB serial driver in Table 2. 4. Updated conducted RF receiving sensitivity of EC21-EU Mini PCIe in Table 29. 5. Added conducted RF receiving sensitivity of EC21-AUX Mini PCIe in Table 31. 6. Added current consumption of EC21-AUX Mini PCIe in Table 36. 7. Added current consumption of EC21-EU Mini PCIe in Table 37. 8. Added current consumption of EC21-AU Mini PCIe in Table 38. 9. Added note 2 for antenna requirement in Chapter 5.4.1. 10. Deleted current consumption of EC21-EC Mini PCIe, and the data will be updated in the future version.

1.4	2019-11-26	Fanny CHEN	1. Removed related information of ThreadX OS because the baseline has been updated. 2. Updated the supported protocols and USB serial drivers in Table 2. 3. Added operating modes of module in Chapter 3.3. 4. Updated description of W_DISABLE# in Chapter 3.10.3. 5. Updated the notes for GNSS performance in Chapter 4.2. 6. Added current consumption of EC21-J Mini PCIe in Table 40. 7. Updated the Mini PCI Express connector in Chapter 7.3.
1.5	2021-08-20	Barret XIONG	1. Added the related information of EC21-EUX Mini PCIe. 2. Deleted the related information of EC21-EC Mini PCIe. 3. Updated the USB serial drivers (Chapter 2.3). 4. Added the power consumption of EC21-E (Chapter 6.7). 5. Updated all unmarked dimension tolerances from ±0.05 mm to ±0.2 mm (Chapter 7). 6. Updated the information of packaging specifications (Chapter 7.4).

Contents

Safety Information **3**
About the Document **4**
Contents **7**
Table Index **9**
Figure Index **11**

1 Introduction **12**
1.1. Special Mark 12

2 Product Overview **13**
2.1. General Description 13
2.2. Description of Module Series 13
2.3. Key Features 15
2.4. Functional Diagram 17

3 Application Interfaces **18**
3.1. Pin Assignment 18
3.2. Pin Description 19
3.3. Operating Modes 22
3.4. Power Saving 23
3.4.1. Sleep Mode 23
3.4.2. Airplane Mode 23
3.5. Power Supply 23
3.6. (U)SIM Interface 24
3.7. USB Interface 26
3.8. UART Interface 28
3.9. PCM and I2C Interfaces 29
3.10. Control and Indication Interfaces 31
3.10.1. RI 32
3.10.2. DTR 32
3.10.3. W_DISABLE# 32
3.10.4. PERST# 33
3.10.5. LED_WWAN# 33
3.10.6. WAKE# 34

4 GNSS **36**
4.1. General Description 36
4.2. GNSS Performance 36
4.3. GNSS Frequency 37

5 Antenna Connection **38**
5.1. Antenna Connectors 38
5.1.1. Operating Frequency 38
5.2. Antenna Design Requirements 39

5.3. Recommended Mating Plugs for Antenna Connection 40

6 Reliability, Radio and Electrical Characteristics 42

6.1. General Description 42
6.2. Power Supply Requirements 42
6.3. Digital I/O Characteristic 43
6.4. Tx Power 43
6.5. Rx Sensitivity 44
6.6. ESD 49
6.7. Power Consumption 50
6.8. Thermal Dissipation 65
6.9. Notification 66
6.9.1. Coating 66
6.9.2. Cleaning 66

7 Mechanical Information 67

7.1. General Description 67
7.2. Mechanical Dimensions 67
7.3. Standard Dimensions of Mini PCI Express 68
7.4. Packaging Specifications 69
7.4.1. Blister Tray 69
7.4.2. Packaging Process 71

8 Appendix References 72

Table Index

Table 1: Special Mark 12
Table 2: Description of EC21 Series Mini PCIe 13
Table 3: Key Features of EC21 Series Mini PCIe 15
Table 4: I/O Parameters Definition 19
Table 5: Pin Description 19
Table 6: Overview of Operating Modes 22
Table 7: Pin Definition of VCC_3V3 and GND Pins 23
Table 8: Pin Definition of (U)SIM Interface 24
Table 9: Pin Definition of USB Interface 26
Table 10: Pin Definition of Main UART Interface 28
Table 11: Pin Definition of PCM and I2C Interfaces 29
Table 12: Pin Definition of Control and Indication Interfaces 31
Table 13: Airplane Mode Controlled by Hardware Method 32
Table 14: Airplane Mode Controlled by Software Method 33
Table 15: Indications of Network Status (AT+QCFG="ledmode",0, Default Setting) 34
Table 16: Indications of Network Status (AT+QCFG="ledmode",2) 34
Table 17: GNSS Performance 36
Table 18: GNSS Frequency 37
Table 19: Operating Frequencies 38
Table 20: Antenna Requirements 39
Table 21: Power Supply Requirements 42
Table 22: I/O Requirements 43
Table 23: Conducted RF Output Power of EC21 Series Mini PCIe 43
Table 24: Conducted RF Receiving Sensitivity of EC21-E Mini PCIe 44
Table 25: Conducted RF Receiving Sensitivity of EC21-A Mini PCIe 45
Table 26: Conducted RF Receiving Sensitivity of EC21-V Mini PCIe 45
Table 27: Conducted RF Receiving Sensitivity of EC21-AUT Mini PCIe 45
Table 28: Conducted RF Receiving Sensitivity of EC21-AU Mini PCIe 46
Table 29: Conducted RF Receiving Sensitivity of EC21-J Mini PCIe 47
Table 30: Conducted RF Receiving Sensitivity of EC21-KL Mini PCIe 47
Table 31: Conducted RF Receiving Sensitivity of EC21-EU Mini PCIe 47
Table 32: Conducted RF Receiving Sensitivity of EC21-AUX Mini PCIe 48
Table 33: Conducted RF Receiving Sensitivity of EC21-EUX Mini PCIe 49
Table 34: ESD Characteristics of EC21 Series Mini PCIe 50
Table 35: Power Consumption of EC21-E Mini PCIe 50
Table 36: Power Consumption of EC21-A Mini PCIe 52
Table 37: Power Consumption of EC21-V Mini PCIe 53
Table 38: Power Consumption of EC21-AU Mini PCIe 53
Table 39: Power Consumption of EC21-J Mini PCIe 56
Table 40: Power Consumption of EC21-KL Mini PCIe 57
Table 41: Power Consumption of EC21-EU Mini PCIe 57

Table 42: Power Consumption of EC21-AUX Mini PCIe 59
Table 43: Power Consumption of EC21-EUX Mini PCIe 62
Table 44: GNSS Power Consumption of EC21 Series Mini PCIe Module 64
Table 45: Related Documents 72
Table 46: Terms and Abbreviations 72

Figure Index

Figure 1: Functional Diagram 17
Figure 2: Pin Assignment 18
Figure 3: Reference Circuit of Power Supply 24
Figure 4: Reference Circuit of (U)SIM Interface with an 8-pin (U)SIM Card Connector 25
Figure 5: Reference Circuit of (U)SIM Interface with a 6-pin (U)SIM Card Connector 25
Figure 6: Reference Circuit of USB Interface 27
Figure 7: Reference Circuit of Power Supply 28
Figure 8: Timing in Primary Mode 30
Figure 9: Timing in Auxiliary Mode 30
Figure 10: Reference Circuit of PCM Application with Audio Codec 31
Figure 11: RI Behaviors 32
Figure 12: Reset Timing 33
Figure 13: LED_WWAN# Signal Reference Circuit Diagram 34
Figure 14: WAKE# Behaviors 35
Figure 15: Dimensions of the Receptacle RF Connectors (Unit: mm) 40
Figure 16: Mechanicals of U.FL-LP Mating Plugs 41
Figure 17: Space Factor of Mating Plugs (Unit: mm) 41
Figure 18: Referenced Heatsink Design 65
Figure 19: Mechanical Dimensions of EC21 Series Mini PCIe 67
Figure 20: Standard Dimensions of Mini PCI Express 68
Figure 21: Dimensions of the Mini PCI Express Connector (Molex 679105700) 69
Figure 22: Blister Tray Dimension Drawing 70
Figure 23: Packaging Process 71

1 Introduction

This document defines EC21 series Mini PCIe module, and describes its air interfaces and hardware interfaces which are connected with customers' applications.

This document helps customers quickly understand module interface specifications, electrical characteristics, mechanical specifications and other related information of the module. To facilitate application designs, it also includes some reference designs for customers' reference. The document, coupled with application notes and user guides, makes it easy to design and set up wireless applications with EC21 series Mini PCIe.

1.1. Special Mark

Table 1: Special Mark

Mark	Definition
*	Unless otherwise specified, when an asterisk (*) is used after a function, feature, interface, pin name, AT command, or argument, it indicates that the function, feature, interface, pin, AT command, or argument is under development and currently not supported; and the asterisk (*) after a model indicates that the sample of such model is currently unavailable.

2 Product Overview

2.1. General Description

EC21 series Mini PCIe module provides data connectivity on LTE-FDD, LTE-TDD, DC-HSDPA, HSPA+, HSDPA, HSUPA, WCDMA, EDGE and GPRS networks with PCI Express Mini Card 1.2 standard interface. It supports embedded operating systems such as Linux, Android etc., and also provides audio, high-speed data transmission and GNSS functionalities for customers' applications.

EC21 series Mini PCIe module can be applied in the following fields:

- PDA and laptop computer
- Remote monitor system
- Wireless POS system
- Intelligent meter reading system
- Wireless router and switch
- Other wireless terminal devices

NOTE

EC21 series Mini PCIe contains **Data + Voice** version and **Data-only** version. **Data + Voice** version supports voice and data functions, while **Data-only** version only supports data function.

2.2. Description of Module Series

EC21 series Mini PCIe series contains 10 variants, and are listed in the following table.

Table 2: Description of EC21 Series Mini PCIe

Module Series	Description
EC21-E Mini PCIe	Supports GSM: 900/1800 Supports WCDMA: B1/B5/B8 Supports LTE-FDD: B1/B3/B5/B7/B8/B20

	Supports LTE/WCDMA receive diversity Supports GNSS Supports digital audio
EC21-A Mini PCIe	Supports WCDMA: B2/B4/B5 Supports LTE-FDD: B2/B4/B12 Supports LTE/WCDMA receive diversity Supports GNSS Supports digital audio
EC21-V Mini PCIe	Supports LTE-FDD: B4/B13 Supports LTE receive diversity Supports GNSS Supports digital audio
EC21-AUT Mini PCIe	Supports WCDMA: B1/B5 Supports LTE-FDD: B1/B3/B5/B7/B28 Supports LTE/WCDMA receive diversity Supports GNSS Supports digital audio
EC21-AU Mini PCIe [1]	Supports GSM: 850/900/1800/1900 Supports WCDMA: B1/B2/B5/B8 Supports LTE-FDD: B1/B2/B3/B4/B5/B7/B8/B28 Supports LTE-TDD: B40 Supports LTE/WCDMA receive diversity Supports GNSS Supports digital audio
EC21-J Mini PCIe	Supports LTE-FDD: B1/B3/B8/B18/B19/B26 Supports LTE receive diversity Supports digital audio
EC21-KL Mini PCIe	Supports LTE-FDD: B1/B3/B5/B7/B8 Supports LTE receive diversity Supports digital audio
EC21-EU Mini PCIe	Supports GSM: 900/1800 Supports WCDMA: B1/B8 Supports LTE-FDD: B1/B3/B7/B8/B20/B28A Supports LTE/WCDMA receive diversity Supports GNSS Supports digital audio
EC21-AUX Mini PCIe [1]	Supports GSM: 850/900/1800/1900 Supports WCDMA: B1/B2/B4/B5/B8 Supports LTE-FDD: B1/B2/B3/B4/B5/B7/B8/B28 Supports LTE-TDD: B40 Supports LTE/WCDMA receive diversity Supports GNSS

[1] B2 of EC21-AU Mini PCIe and EC21-AUX Mini PCIe module does not support Rx-diversity.

	Supports digital audio
EC21-EUX Mini PCIe	Supports LTE-FDD: B1/B3/B7/B8/B20/B28A Supports WCDMA: B1/B8 Supports GSM: 900/1800 Supports LTE/WCDMA receive diversity Supports GNSS Supports digital audio

NOTE

1. The GNSS function of EC21 series Mini PCIe is optional.
2. Digital audio (PCM) function is only supported on **Data +Voice** version.

2.3. Key Features

Table 3: Key Features of EC21 Series Mini PCIe

Features	Description
Function Interface	PCI Express Mini Card 1.2 Standard Interface
Power Supply	● Supply voltage: 3.0–3.6 V ● Typical supply voltage: 3.3 V
Transmitting Power	● Class 4 (33 dBm ±2 dB) for GSM850 ● Class 4 (33 dBm ±2 dB) for EGSM900 ● Class 1 (30 dBm ±2 dB) for DCS1800 ● Class 1 (30 dBm ±2 dB) for PCS1900 ● Class E2 (27 dBm ±3 dB) for GSM850 8-PSK ● Class E2 (27 dBm ±3 dB) for EGSM900 8-PSK ● Class E2 (26 dBm ±3 dB) for DCS1800 8-PSK ● Class E2 (26 dBm ±3 dB) for PCS1900 8-PSK ● Class 3 (24 dBm +1/-3 dB) for WCDMA bands ● Class 3 (23 dBm ±2 dB) for LTE-FDD bands ● Class 3 (23 dBm ±2 dB) for LTE-TDD bands
LTE Features	● Support up to non-CA Cat 1 FDD and TDD ● Support 1.4/3/5/10/15/20 MHz RF bandwidth ● Support MIMO in DL direction ● LTE-FDD: Max. 10 Mbps (DL)/Max. 5 Mbps (UL) ● LTE-TDD: Max. 8.96 Mbps (DL)/Max. 3.1 Mbps (UL)
UMTS Features	● Support 3GPP Rel-8 DC-HSDPA, HSPA+, HSDPA, HSUPA and WCDMA

	● Support QPSK, 16QAM and 64QAM modulation ● DC-HSDPA: Max. 42 Mbps (DL) ● HSUPA: Max. 5.76 Mbps (UL) ● WCDMA: Max. 384 kbps (DL)/Max. 384 kbps (UL)
GSM Features	**GPRS:** ● Support GPRS multi-slot class 33 (33 by default) ● Coding scheme: CS-1, CS-2, CS-3 and CS-4 ● Max. 107 kbps (DL)/Max. 85.6 kbps (UL) **EDGE:** ● Support EDGE multi-slot class 33 (33 by default) ● Support GMSK and 8-PSK for different MCS (Modulation and Coding Scheme) ● Downlink coding schemes: MCS 1-9 ● Uplink coding schemes: MCS 1-9 ● Max. 296 kbps (DL)/Max. 236.8 kbps (UL)
Internet Protocol Features	● Support TCP/UDP/PPP/FTP/FTPS/HTTP/HTTPS/NTP/PING/QMI/ NITZ/SMTP/SSL/MQTT/CMUX/SMTPS/MMS*/FILE* protocols ● Support PAP and CHAP for PPP connections
SMS	● Text and PDU modes ● Point-to-point MO and MT ● SMS cell broadcast ● SMS storage: ME by default
(U)SIM Interface	Support USIM/SIM card: 1.8 V, 3.0 V
UART Interface	**Main UART**: ● Support RTS and CTS hardware flow control ● Baud rate can reach up to 230400 bps, 115200 bps by default ● Used for AT command communication and data transmission
Audio Features	● Support one digital audio interface: PCM interface ● GSM: HR/FR/EFR/AMR/AMR-WB ● WCDMA: AMR/AMR-WB ● LTE: AMR/AMR-WB ● Support echo cancellation and noise suppression
PCM Interface	● Support 16-bit linear data format ● Support long frame synchronization and short frame synchronization ● Support master and slave modes, but must be the master in long frame synchronization
USB Interface	● Compliant with USB 2.0 specification (slave only); the data transfer rate can reach up to 480 Mbps ● Used for AT command communication, data transmission, firmware upgrade, software debugging, GNSS NMEA output and voice over USB. ● Support USB serial drivers for: Windows 7/8/8.1/10, Linux 2.6–5.12, Android 4.x–11.x, etc.

Antenna Connectors	Include main antenna, diversity antenna and GNSS antenna receptacle connectors
Rx-diversity (Optional)	Support LTE/WCDMA Rx-diversity
GNSS Features	● Protocol: *NMEA 0183* ● Data update rate: 1 Hz by default
AT Commands	● Compliant with *3GPP TS 27.007* and *3GPP TS 27.005* ● Quectel enhanced AT commands
Physical Characteristics	● Size: (51.0 ±0.15) mm × (30.0 ±0.15) mm × (4.9 ±0.2) mm ● Weight: approx. 9.8 g
Temperature Range	● Operating temperature range: -35 °C to +75 °C [2] ● Extended temperature range: -40 °C to +80 °C [3] ● Storage temperature range: -40 °C to +90 °C
Firmware Upgrade	USB interface or DFOTA*
RoHS	All hardware components are fully compliant with EU RoHS directive

2.4. Functional Diagram

The following figure shows the block diagram of EC21 series Mini PCIe.

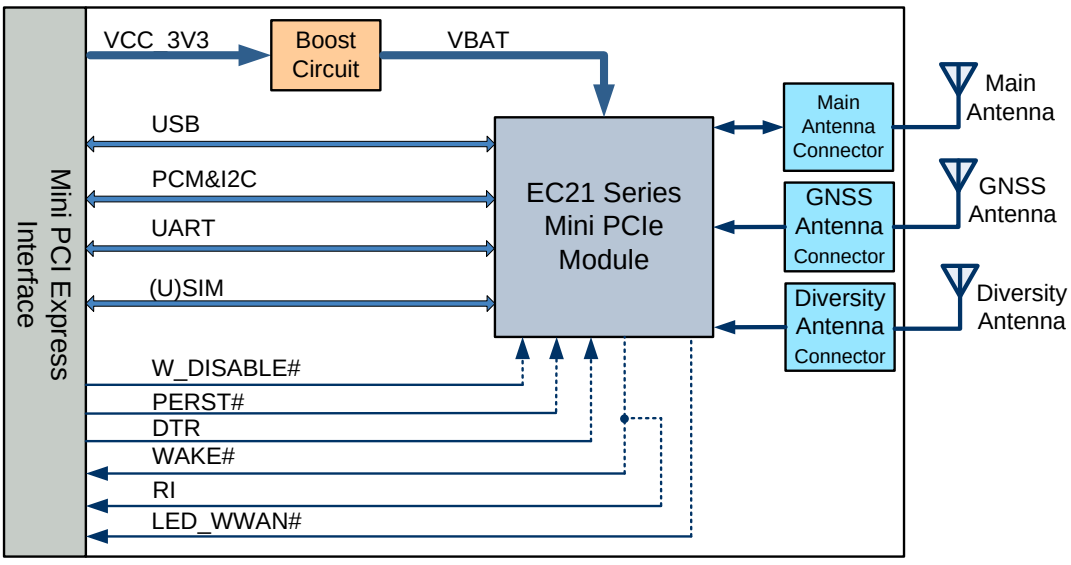

Figure 1: Functional Diagram

[2] Within operating temperature range, the module is 3GPP compliant.
[3] Within extended temperature range, the module remains the ability to establish and maintain a voice, SMS, data transmission, etc. There is no unrecoverable malfunction. There are also no effects on radio spectrum and no harm to radio network. Only one or more parameters like P_{out} might reduce in their value and exceed the specified tolerances. When the temperature returns to normal operation temperature levels, the module will meet 3GPP specifications again.

3 Application Interfaces

The physical connections and signal levels of EC21 series Mini PCIe comply with *PCI Express Mini Card Electromechanical Specification*. This chapter mainly describes the definition and application of the following interfaces/pins of EC21 series Mini PCIe.

- Power supply
- (U)SIM interface
- USB interface
- UART interface
- PCM and I2C interfaces
- Control and indication interfaces

3.1. Pin Assignment

The following figure shows the pin assignment of EC21 series Mini PCIe module. The top side contains EC21 series module and antenna connectors.

Pin Name	Pin No.
WAKE#	1
RESERVED	3
RESERVED	5
RESERVED	7
GND	9
UART_RX	11
UART_TX	13
GND	15
RI	17
RESERVED	19
GND	21
UART_CTS	23
UART_RTS	25
GND	27
GND	29
DTR	31
RESERVED	33
GND	35
GND	37
VCC_3V3	39
VCC_3V3	41
GND	43
PCM_CLK	45
PCM_DOUT	47
PCM_DIN	49
PCM_SYNC	51



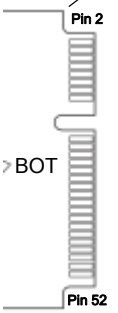

Pin No.	Pin Name
2	VCC_3V3
4	GND
6	NC
8	USIM_VDD
10	USIM_DATA
12	USIM_CLK
14	USIM_RST
16	RESERVED
18	GND
20	W_DISABLE#
22	PERST#
24	RESERVED
26	GND
28	NC
30	I2C_SCL
32	I2C_SDA
34	GND
36	USB_DM
38	USB_DP
40	GND
42	LED_WWAN#
44	USIM_PRESENCE
46	RESERVED
48	NC
50	GND
52	VCC_3V3

Figure 2: Pin Assignment

3.2. Pin Description

The following tables show the pin definition and description of the 52 pins on EC21 series Mini PCIe.

Table 4: I/O Parameters Definition

Type	Description
AIO	Analog Input/Output
DI	Digital Input
DO	Digital Output
DIO	Digital Input/Output
OC	Open Collector
PI	Power Input
PO	Power Output

Table 5: Pin Description

Pin No.	Mini PCI Express Standard Name	EC21 Series Mini PCIe Pin Name	I/O	Description	Comment
1	WAKE#	WAKE#	OC	Wake up the host	
2	3.3Vaux	VCC_3V3	PI	3.0–3.6 V, typ. 3.3 V DC supply	
3	COEX1	RESERVED		Reserved	It is prohibited to be pulled up to high level before startup.
4	GND	GND		Mini card ground	
5	COEX2	RESERVED		Reserved	It is prohibited to be pulled up to high level before startup.
6	1.5V	NC		Not connected	
7	CLKREQ#	RESERVED		Reserved	

8	UIM_PWR	USIM_VDD	PO	(U)SIM card power supply	
9	GND	GND		Mini card ground	
10	UIM_DATA	USIM_DATA	DIO	(U)SIM card data	
11	REFCLK-	UART_RX	DI	UART receive	Connect to DTE's Tx.
12	UIM_CLK	USIM_CLK	DO	(U)SIM card clock	
13	REFCLK+	UART_TX	DO	UART transmit	Connect to DTE's Rx.
14	UIM_RESET	USIM_RST	DO	(U)SIM card reset	
15	GND	GND		Mini card ground	
16	UIM_VPP	RESERVED		Reserved	
17	RESERVED	RI	DO	Ring indication	
18	GND	GND		Mini card ground	
19	RESERVED	RESERVED		Reserved	
20	W_DISABLE#	W_DISABLE#	DI	Airplane mode control	Pulled up by default. Active LOW.
21	GND	GND		Mini card ground	
22	PERST#	PERST#	DI	Fundamental reset	Pulled up by default. Active LOW.
23	PERn0	UART_CTS	DI	DCE clear to send signal from DTE	Connect to DTE's RTS
24	3.3Vaux	RESERVED		Reserved	
25	PERp0	UART_RTS	DO	DCE request to send signal from DTE	Connect to DTE's CTS
26	GND	GND		Mini card ground	
27	GND	GND		Mini card ground	
28	1.5V	NC		Not connected	
29	GND	GND		Mini card ground	
30	SMB_CLK	I2C_SCL	DO	I2C serial clock (for external codec)	Require external pull-up

					to 1.8 V.
31	PETn0	DTR	DI	Sleep mode control	
32	SMB_DATA	I2C_SDA	DIO	I2C serial data (for external codec)	Require external pull-up to 1.8 V.
33	PETp0	RESERVED		Reserved	
34	GND	GND		Mini card ground	
35	GND	GND		Mini card ground	
36	USB_D-	USB_DM	AIO	USB differential data (-)	Require differential impedance of 90 Ω.
37	GND	GND		Mini card ground	
38	USB_D+	USB_DP	AIO	USB differential data (+)	Require differential impedance of 90 Ω.
39	3.3Vaux	VCC_3V3	PI	3.0–3.6 V, typically 3.3 V DC supply	
40	GND	GND		Mini card ground	
41	3.3Vaux	VCC_3V3	PI	3.0–3.6 V, typically 3.3 V DC supply	
42	LED_WWAN#	LED_WWAN#	OC	LED signal for indicating the network status of the module	Active LOW.
43	GND	GND		Mini card ground	
44	LED_WLAN#	USIM_ PRESENCE	DI	(U)SIM card insertion detect	
45	RESERVED	PCM_CLK [4]	DIO	PCM clock	
46	LED_WPAN#	RESERVED		Reserved	
47	RESERVED	PCM_DOUT [4]	DO	PCM data output	
48	1.5V	NC		Not connected	

[4] The digital audio (PCM) function is only supported on **Data + Voice** version.

49	RESERVED	PCM_DIN [4]	DI	PCM data input
50	GND	GND		Mini card ground
51	RESERVED	PCM_SYNC [4]	DIO	PCM frame sync
52	3.3Vaux	VCC_3V3	PI	3.0–3.6 V, typically 3.3 V DC supply

NOTE

Keep all NC, RESERVED and unused pins unconnected.

3.3. Operating Modes

The following table briefly outlines the operating modes to be mentioned in the following chapters.

Table 6: Overview of Operating Modes

Mode	Details	
Normal Operation	Idle	The module remains registered on the network, and is ready to send and receive data. In this mode, the software is active.
	Talk/Data	The module is connected to network. Its current consumption varies with the network setting and data transfer rate.
Airplane Mode	**AT+CFUN=4** or W_DISABLE# pin can set the module to airplane mode where the RF function is invalid.	
Minimum Functionality Mode	**AT+CFUN=0** can set the module into a minimum functionality mode without removing the power supply. In this mode, both RF function and (U)SIM card are invalid.	
Sleep Mode	The module remains the ability to receive paging message, SMS, voice call and TCP/UDP data from the network normally. In this mode, the current consumption of the module is reduced to a very low level.	

For details of the command, see ***document*** *错误!未找到引用源。*.

3.4. Power Saving

3.4.1. Sleep Mode

EC21 series Mini PCIe is able to reduce its current consumption to a minimum value in sleep mode. There are three preconditions must be met to make the module enter sleep mode.

- Execute **AT+QSCLK=1** to enable sleep mode. For more details, see ***document [1].***
- Ensure DTR is kept at high level or be kept open.
- The host's USB bus, which is connected with the module's USB interface, enters suspend state.

3.4.2. Airplane Mode

When the module enters airplane mode, the RF function will be disabled, and all AT commands related to it will be inaccessible. For more details, refer to ***Chapter 3.10.3.***

3.5. Power Supply

The following table shows pin definition of VCC_3V3 pins and ground pins.

Table 7: Pin Definition of VCC_3V3 and GND Pins

Pin Name	Pin No.	I/O	Power Domain	Description
VCC_3V3	2, 39, 41, 52	PI	3.0–3.6 V	Typ. 3.3 V DC supply
GND	4, 9, 15, 18, 21, 26, 27, 29, 34, 35, 37, 40, 43, 50			

The typical supply voltage of EC21 series Mini PCIe is 3.3 V. In the 2G network, the input peak current may reach 2.7 A during the transmitting time. Therefore, the power supply must be able to provide a rated output current of 2.7 A at least, and a bypass capacitor of no less than 470 µF with low ESR should be used to prevent the voltage from dropping. If the switching power supply is used to supply power to the module, the power device and power supply routing traces of the switching power supply should avoid the antennas as much as possible to prevent EMI interference.

The following figure shows a reference design of power supply where R2 and R3 are 1 % tolerance resistors and C3 is a low-ESR capacitor (470 µF).

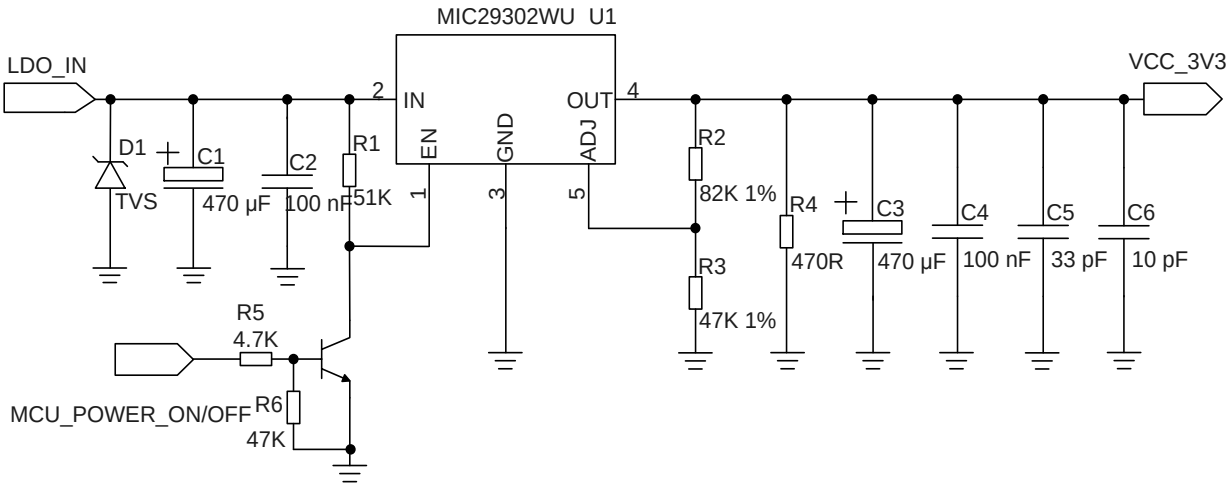

Figure 3: Reference Circuit of Power Supply

3.6. (U)SIM Interface

The (U)SIM interface circuitry meets ETSI and IMT-2000 requirements. Both 1.8 V and 3.0 V (U)SIM cards are supported. The following table shows the pin definition of (U)SIM interface.

Table 8: Pin Definition of (U)SIM Interface

Pin Name	Pin No.	I/O	Power Domain	Description
USIM_VDD	8	PO	1.8/3.0 V	(U)SIM card power supply
USIM_DATA	10	DIO	1.8/3.0 V	(U)SIM card data
USIM_CLK	12	DO	1.8/3.0 V	(U)SIM card clock
USIM_RST	14	DO	1.8/3.0 V	(U)SIM card reset
USIM_PRESENCE	44	DI	1.8 V	(U)SIM card insertion detect

EC21 series Mini PCIe supports (U)SIM card hot-plug via the USIM_PRESENCE pin. The function supports low-level and high-level detections. By default, it is disabled, and can be configured via **AT+QSIMDET**. See ***document [1]*** for details about the command.

The following figure shows a reference design for (U)SIM interface with an 8-pin (U)SIM card connector.

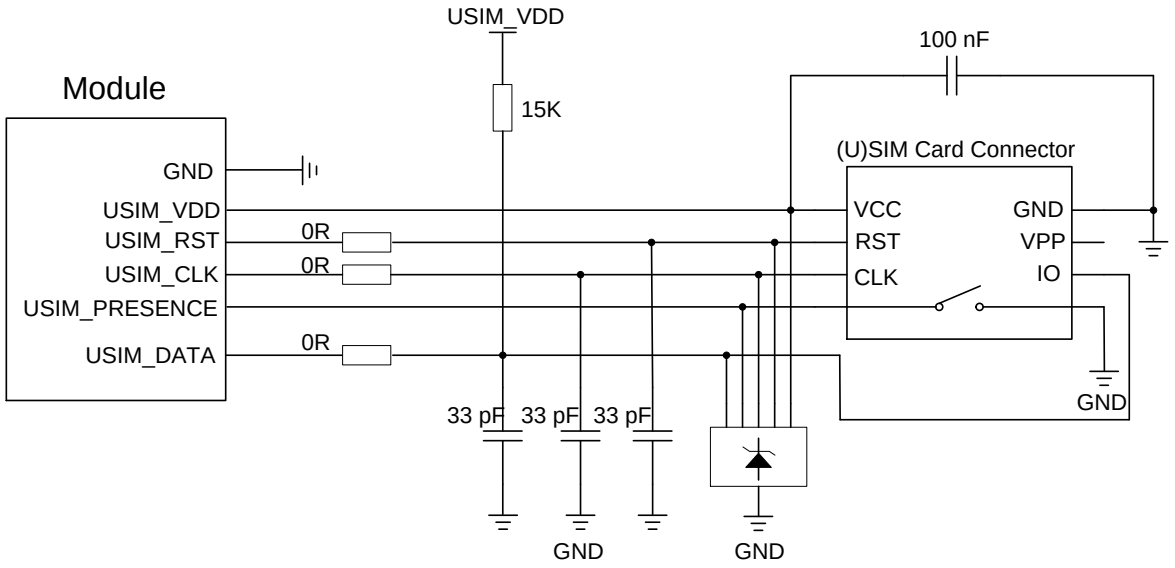

Figure 4: Reference Circuit of (U)SIM Interface with an 8-pin (U)SIM Card Connector

If (U)SIM card detection function is not needed, please keep USIM_PRESENCE unconnected. A reference circuit for (U)SIM interface with a 6-pin (U)SIM card connector is illustrated in the following figure.

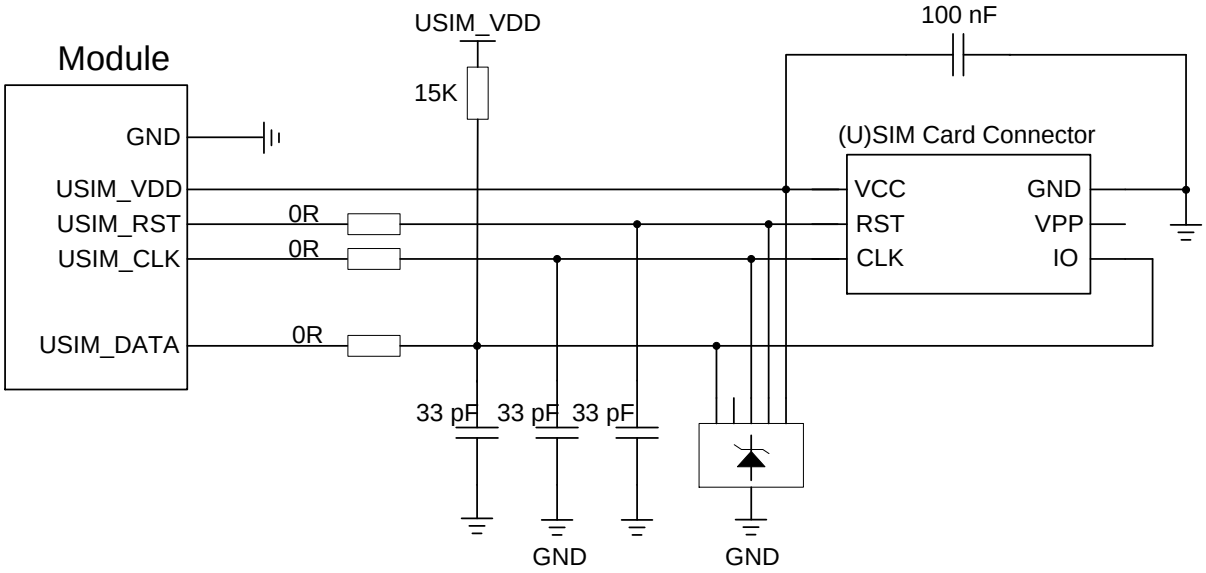

Figure 5: Reference Circuit of (U)SIM Interface with a 6-pin (U)SIM Card Connector

In order to enhance the reliability and availability of the (U)SIM card in customers' applications, please follow the criteria below in (U)SIM circuit design:

- Keep placement of (U)SIM card connector to the module as close as possible. Keep the trace length as less than 200 mm as possible.
- Keep (U)SIM card signals away from RF and power supply traces.
- To avoid cross-talk between USIM_DATA and USIM_CLK, keep them away from each other and shield them with surrounded ground.
- For better ESD protection, it is recommended to add a TVS diode with parasitic capacitance not exceeding 15 pF.
- The 0 Ω resistors should be added in series between the module and the (U)SIM card connector to facilitate debugging. The 33 pF capacitors are used for filtering interference of EGSM900. Please note that the (U)SIM peripheral circuit should be close to the (U)SIM card connector.
- The pull-up resistor on USIM_DATA trace can improve anti-jamming capability when long layout trace and sensitive occasion are applied, and should be placed close to the (U)SIM card connector.

3.7. USB Interface

EC21 series Mini PCIe provides one integrated Universal Serial Bus (USB) interface which complies with USB 2.0 specification. It can only be used as a slave device. EC21 series Mini PCIe supports high-speed (480 Mbps) mode and full-speed (12 Mbps) mode.

The USB interface is used for AT command communication, data transmission, GNSS NMEA output, software debugging, firmware upgrade and voice over USB.

The following table shows the pin definition of USB interface.

Table 9: Pin Definition of USB Interface

Pin Name	Pin No.	I/O	Description	Comment
USB_DM	36	AIO	USB differential data (-)	Require differential impedance of 90 Ω.
USB_DP	38	AIO	USB differential data (+)	Require differential impedance of 90 Ω.

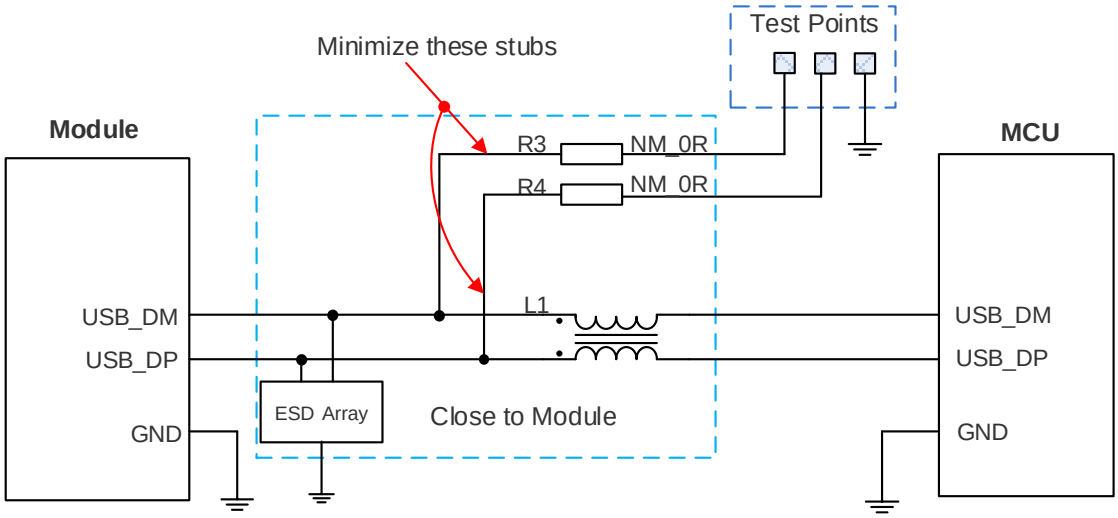

Figure 6: Reference Circuit of USB Interface

A common mode choke L1 is recommended to be added in series between the module and customer's MCU to suppress EMI spurious transmission. Meanwhile, the 0 Ω resistors (R3 and R4) should be added in series between the module and the test points to facilitate debugging, and the resistors are not mounted by default. In order to ensure the integrity of USB data trace signal, L1 & R3 & R4 components must be placed close to the module, and also these resistors should be placed close to each other. The extra stubs of trace must be as short as possible.

To meet USB 2.0 specification, the following principles should be complied with when design the USB interface.

- Route the USB signal traces as differential pairs with ground surrounded. The impedance of USB differential trace is 90 Ω.
- Do not route signal traces under crystals, oscillators, magnetic devices and RF signal traces. Route the USB differential traces in inner-layer of the PCB, and surround the traces with ground on that layer and with ground planes above and below.
- Junction capacitance of the ESD protection device might cause influences on USB data traces, so you should pay attention to the selection of the device. Typically, the capacitance value should be less than 2 pF.
- Keep the ESD protection devices as close to the USB connector as possible.

3.8. UART Interface

EC21 series Mini PCIe module provides one main UART interface. The main UART interface supports 9600 bps, 19200 bps, 38400 bps, 57600 bps, 115200 bps and 230400 bps baud rates, and the default is 115200 bps.

The main UART interface supports RTS and CTS hardware flow control, and be used for AT command communication and data transmission.

The following table shows the pin definition of the main UART interface.

Table 10: Pin Definition of Main UART Interface

Pin Name	Pin No.	I/O	Description	Power Domain
UART_RX	11	DI	UART receive	3.3 V
UART_TX	13	DO	UART transmit	3.3 V
UART_CTS	23	DI	DCE clear to send signal from DTE	3.3 V
UART_RTS	25	DO	DCE request to send signal from DTE	3.3 V

The signal level of main UART interface is 3.3 V. When connecting to the peripheral MCU/RAM, customers need to pay attention to the signal direction. The reference circuit is shown as below:

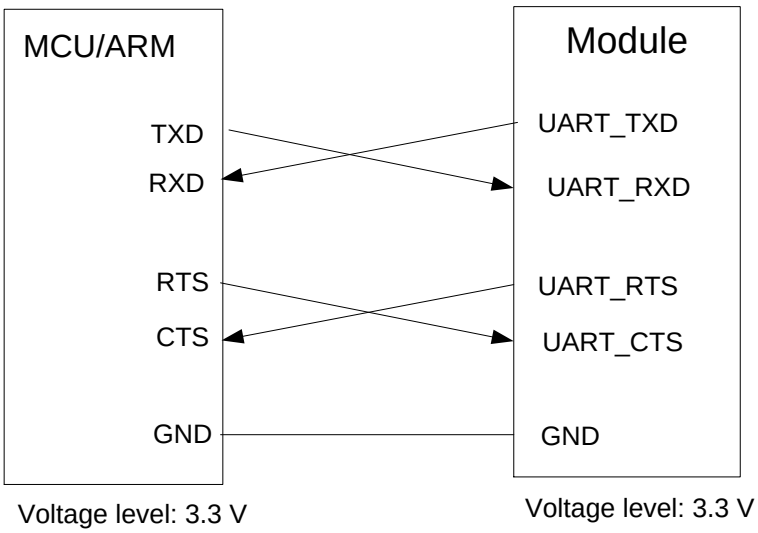

Figure 7: Reference Circuit of Power Supply

NOTE

AT+IPR can be used to set the baud rate of the main UART, and **AT+IFC** can be used to set the hardware flow control (hardware flow control is disabled by default). See ***document [1]*** for details.

3.9. PCM and I2C Interfaces

EC21 series Mini PCIe provides one Pulse Code Modulation (PCM) digital interface and one I2C interface.

The following table shows the pin definition of PCM and I2C interfaces that can be applied in audio codec design.

Table 11: Pin Definition of PCM and I2C Interfaces

Pin Name	Pin No.	I/O	Description	Comment
PCM_CLK [5]	45	DIO	PCM clock	1.8 V
PCM_DOUT [5]	47	DO	PCM data output	1.8 V
PCM_DIN [5]	49	DI	PCM data input	1.8 V
PCM_SYNC [5]	51	DIO	PCM frame sync	1.8 V
I2C_SCL	30	DO	I2C serial clock (for external codec)	Require external pull-up to 1.8 V.
I2C_SDA	32	DIO	I2C serial data (for external codec)	Require external pull-up to 1.8 V.

EC21 series Mini PCIe provides one PCM digital interface, which supports 16-bit linear data format and the following modes:

- Primary mode (short frame synchronization, works as either master or slave)
- Auxiliary mode (long frame synchronization, works as master only)

In primary mode, the data is sampled on the falling edge of the PCM_CLK and transmitted on the rising edge. The PCM_SYNC falling edge represents the MSB. In this mode, the PCM interface supports 256 kHz, 512 kHz, 1024 kHz or 2048 kHz PCM_CLK at 8 kHz PCM_SYNC, and also supports 4096 kHz PCM_CLK at 16 kHz PCM_SYNC.

[5] The digital audio (PCM) function is only supported on **Data + Voice** version.

The following figure shows the timing relationship in primary mode with 8 kHz PCM_SYNC and 2048 kHz PCM_CLK.

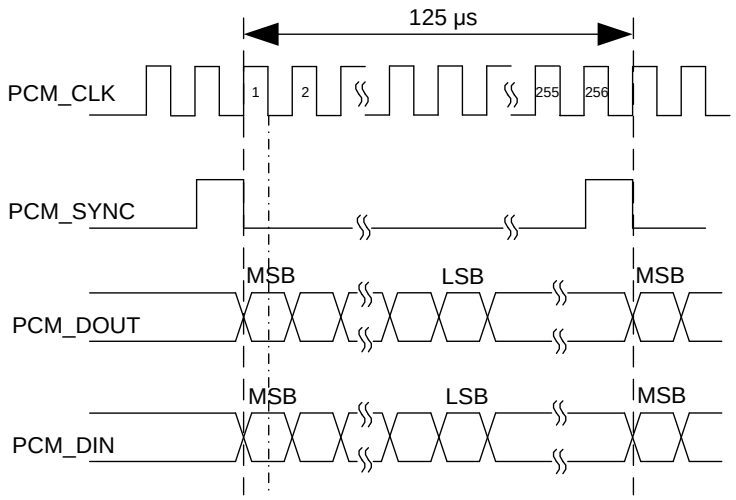

Figure 8: Timing in Primary Mode

In auxiliary mode, the data is sampled on the falling edge of the PCM_CLK and transmitted on the rising edge. The PCM_SYNC rising edge represents the MSB. In this mode, the PCM interface operates with a 256 kHz, 512 kHz, 1024 kHz or 2048 kHz PCM_CLK and an 8 kHz, 50 % duty cycle PCM_SYNC.

The following figure shows the timing relationship in auxiliary mode with 8 kHz PCM_SYNC and 256 kHz PCM_CLK.

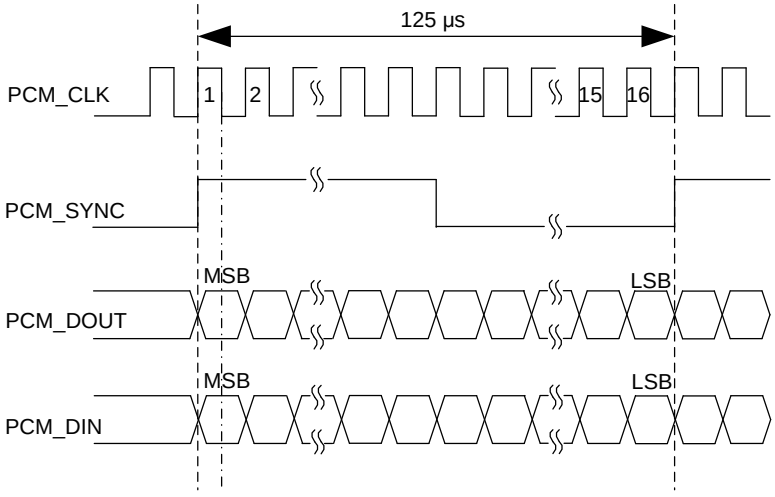

Figure 9: Timing in Auxiliary Mode

Clock and mode can be configured by AT command, and the default configuration is master mode using short frame synchronization format with 2048 kHz PCM_CLK and 8 kHz PCM_SYNC. In addition, EC21 series Mini PCIe's firmware has integrated the configuration on some PCM codec's application with I2C interface. See ***document [1]*** for details about **AT+QDAI**.

The following figure shows a reference design of PCM interface with an external codec IC.

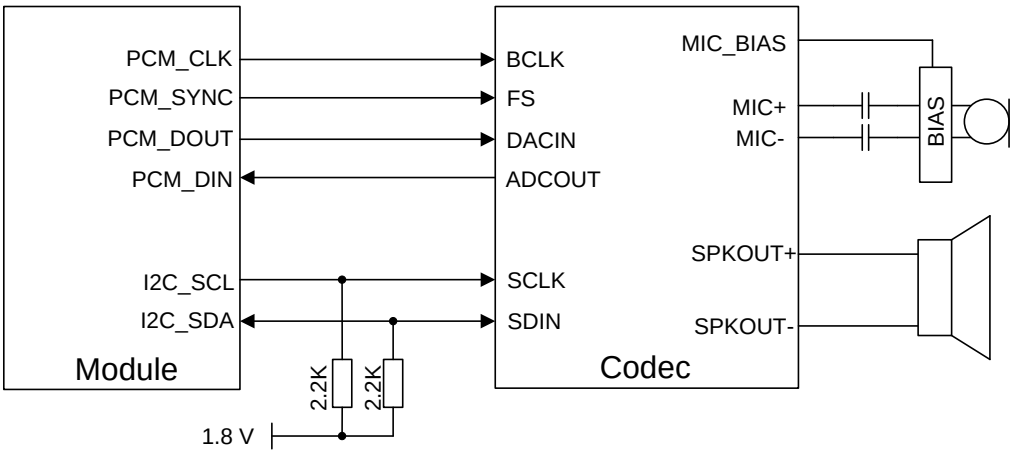

Figure 10: Reference Circuit of PCM Application with Audio Codec

3.10. Control and Indication Interfaces

The following table shows the pin definition of control and indication interfaces.

Table 12: Pin Definition of Control and Indication Interfaces

Pin Name	Pin No.	I/O	Description	Comment
RI	17	DO	Ring indication	3.3 V power domain.
DTR	31	DI	Sleep mode control	3.3 V power domain.
W_DISABLE#	20	DI	Airplane mode control	3.3 V power domain. Pulled up by default. Active LOW.
PERST#	22	DI	Fundamental reset	3.3 V power domain. Pulled up by default. Active LOW.
LED_WWAN#	42	OC	LED signal for indicating the network status of the module	Active LOW.

WAKE#	1	OC	Wake up the host

3.10.1. RI

The RI signal can be used to wake up the host. When a URC returns, there will be the following behaviors on the RI pin after executing **AT+QCFG="risignaltype","physical"**. See ***document*** *错误!未找到引用源。* for details.

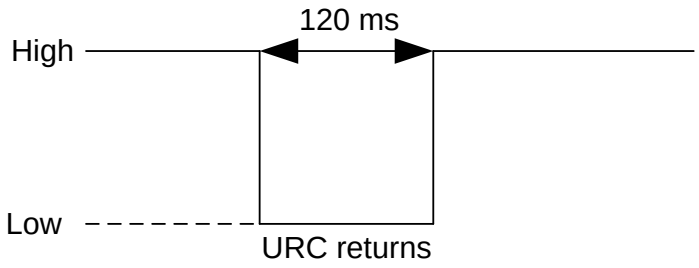

Figure 11: RI Behaviors

3.10.2. DTR

The DTR signal is used for sleep mode control. It is pulled up by default. When the module is in sleep mode, driving DTR low can wake up the module. For more details about the preconditions for the module to enter sleep mode, refer to ***Chapter 3.4.1.***

3.10.3. W_DISABLE#

EC21 series Mini PCIe provides a W_DISABLE# signal to disable or enable the RF function (excluding GNSS). The W_DISABLE# pin is pulled up by default. The W_DISABLE# control function for airplane mode is disabled in firmware by default, it can be enabled by **AT+QCFG="airplanecontrol",1**. Driving it low can make the module enter airplane mode. See ***document*** *错误!未找到引用源。* for details.

Table 13: Airplane Mode Controlled by Hardware Method

W_DISABLE#	RF Function Status	Module Operation Mode
High level	RF enabled	Normal mode
Low level	RF disabled	Airplane mode

The RF function can also be enabled or disabled through **AT+CFUN**, and the details are as follows.

Table 14: Airplane Mode Controlled by Software Method

AT+CFUN=?	RF Function Status	Module Operation Mode
0	RF and (U)SIM card disabled	Minimum functionality mode
1	RF enabled	Normal mode
4	RF disabled	Airplane mode

3.10.4. PERST#

The PERST# signal can be used to force a hardware reset on the card. The module can be reset by driving the PERST# signal low for 150–460 ms and then releasing it. The PERST# signal is sensitive to interference. The traces should be as short as possible and be surrounded with ground.

The reset scenario is illustrated in the following figure.

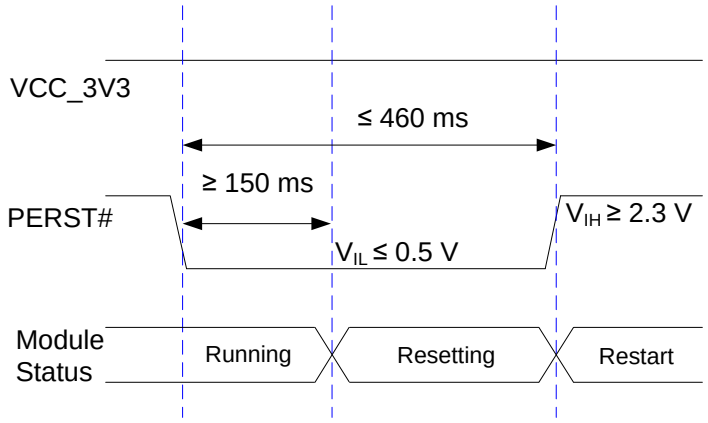

Figure 12: Reset Timing

3.10.5. LED_WWAN#

LED_WWAN# is an open collector output signal, it is used to indicate the network status of the module, and maximum input current can up to 40 mA. According to the following circuit, in order to reduce the current of the LED, a resistor must be placed in series with the LED. The resistance value can be adjusted according to the brightness of the LED light.

The LED is emitting light when the LED_WWAN# output signal is active LOW.

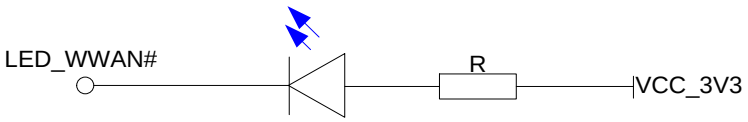

Figure 13: LED_WWAN# Signal Reference Circuit Diagram

There are two indication modes for LED_WWAN# signal to indicate network status, which can be switched through following AT commands:

- **AT+QCFG="ledmode",0 (Default setting)**
- **AT+QCFG="ledmode",2**

The following tables show the detailed network status indications of the LED_WWAN# signal.

Table 15: Indications of Network Status (AT+QCFG="ledmode",0, Default Setting)

Pin Status	Description
Flicker slowly (200 ms Low/1800 ms High)	Network searching
Flicker slowly (1800 ms Low/200 ms High)	Idle
Flicker quickly (125 ms Low/125 ms High)	Data transfer is ongoing
Always Low	Voice calling

Table 16: Indications of Network Status (AT+QCFG="ledmode",2)

Pin Status	Description
Low Level (Light ON)	Registered on network successfully
High-Impedance (Light OFF)	• No network coverage or not registered • W_DISABLE# signal is at low level. (Disable the RF) • **AT+CFUN=0**, **AT+CFUN=4** input

3.10.6. WAKE#

The WAKE# signal is an open collector signal which is similar to RI signal, but a pull-up resistor and **AT+QCFG="risignaltype","physical"** are required. When a URC returns, a 120 ms low level pulse will be outputted. The state of WAKE# signal is shown as below.

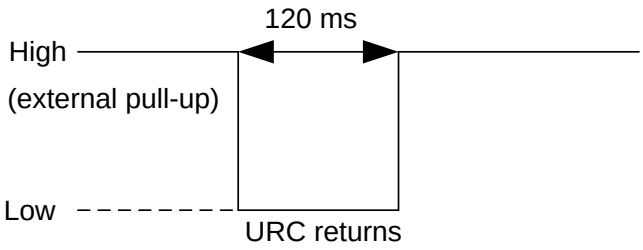

Figure 14: WAKE# Behaviors

4 GNSS

4.1. General Description

EC21 series Mini PCIe includes a fully integrated global navigation satellite system solution that supports GPS, GLONASS, BeiDou (COMPASS), Galileo and QZSS. Additionally, it supports standard *NMEA-0183* protocol, and outputs NMEA sentences at 1 Hz data update rate via USB interface by default.

By default, EC21 series Mini PCIe GNSS engine is switched off. It has to be switched on via AT command. For more details about GNSS engine technology and configurations, see ***document [3].***

4.2. GNSS Performance

The following table shows the GNSS performance of EC21 series Mini PCIe.

Table 17: GNSS Performance

Parameter	Description	Conditions	Typ.	Unit
Sensitivity (GNSS)	Cold start	Autonomous	-146	dBm
	Reacquisition	Autonomous	-157	dBm
	Tracking	Autonomous	-157	dBm
TTFF (GNSS)	Cold start @ open sky	Autonomous	35	s
		XTRA enabled	18	s
	Warm start @ open sky	Autonomous	26	s
		XTRA enabled	2.2	s
	Hot start @ open sky	Autonomous	2.5	s
		XTRA enabled	1.8	s

Accuracy (GNSS)	CEP-50	Autonomous @ open sky	< 2.5	m

NOTE

1. Tracking sensitivity: the minimum GNSS signal power at which the module can maintain lock (keep positioning for at least 3 minutes continuously).
2. Reacquisition sensitivity: the minimum GNSS signal power required for the module to maintain lock within 3 minutes after loss of lock.
3. Cold start sensitivity: the minimum GNSS signal power at which the module can fix position successfully within 3 minutes after executing cold start command.

4.3. GNSS Frequency

The following table shows the GNSS frequency of EC21 series Mini PCIe.

Table 18: GNSS Frequency

Type	Frequency	Unit
GPS	1575.42 ±1.023	MHz
GLONASS	1597.5–1605.8	MHz
Galileo	1575.42 ±2.046	MHz
BeiDou (COMPASS)	1561.098 ±2.046	MHz
QZSS	1575.42	MHz

5 Antenna Connection

5.1. Antenna Connectors

EC21 series Mini PCIe is mounted with three antenna connectors for external antenna connection: a main antenna connector, an Rx-diversity antenna connector, and a GNSS antenna connector. And Rx-diversity function is enabled by default. The impedance of the antenna connectors is 50 Ω.

5.1.1. Operating Frequency

The following table shows the operating frequencies of EC21 series Mini PCIe.

Table 19: Operating Frequencies

3GPP Band	Transmit	Receive	Unit
GSM850	824–849	869–894	MHz
EGSM900	880–915	925–960	MHz
DCS1800	1710–1785	1805–1880	MHz
PCS1900	1850–1910	1930–1990	MHz
WCDMA B1	1920–1980	2110–2170	MHz
WCDMA B2	1850–1910	1930–1990	MHz
WCDMA B4	1710–1755	2110–2155	MHz
WCDMA B5	824–849	869–894	MHz
WCDMA B8	880–915	925–960	MHz
LTE-FDD B1	1920–1980	2110–2170	MHz
LTE-FDD B2	1850–1910	1930–1990	MHz

LTE-FDD B3	1710–1785	1805–1880	MHz
LTE-FDD B4	1710–1755	2110–2155	MHz
LTE-FDD B5	824–849	869–894	MHz
LTE-FDD B7	2500–2570	2620–2690	MHz
LTE-FDD B8	880–915	925–960	MHz
LTE-FDD B12	699–716	729–746	MHz
LTE-FDD B13	777–787	746–756	MHz
LTE-FDD B18	815–830	860–875	MHz
LTE-FDD B19	830–845	875–890	MHz
LTE-FDD B20	832–862	791–821	MHz
LTE-FDD B26	814–849	859–894	MHz
LTE-FDD B28	703–748	758–803	MHz
LTE-TDD B40	2300–2400	2300–2400	MHz

5.2. Antenna Design Requirements

The following table shows the requirements on main antenna, Rx-diversity antenna and GNSS antenna.

Table 20: Antenna Requirements

Type	Requirements
GNSS	Frequency range: 1559–1609 MHz Polarization: RHCP or linear VSWR: < 2 (Typ.) Passive antenna gain: > 0 dBi Active antenna noise figure: < 1.5 dB Active antenna gain: > 0 dBi Active antenna embedded LNA gain: <17 dB
GSM/UMTS/LTE	VSWR: ≤ 2 Efficiency: > 30 % Max input power: 50 W

	Input impedance: 50 Ω Cable insertion loss: **< 1 dB:** LB (<1 GHz) **< 1.5 dB:** MB (1–2.3 GHz) **< 2 dB:** HB (> 2.3 GHz)

NOTE

1. It is recommended to use a passive GNSS antenna when LTE B13 or B14 is supported, as the use of active antenna may generate harmonics which will affect the GNSS performance.
2. Since the GNSS port has a 2.85 V voltage output, a passive antenna that causes shorting to GND, such as PIFA antenna is not recommended.

5.3. Recommended Mating Plugs for Antenna Connection

EC21 series Mini PCIe is mounted with RF connectors (receptacles) for convenient antenna connection. The dimensions of the antenna connectors are shown as below.

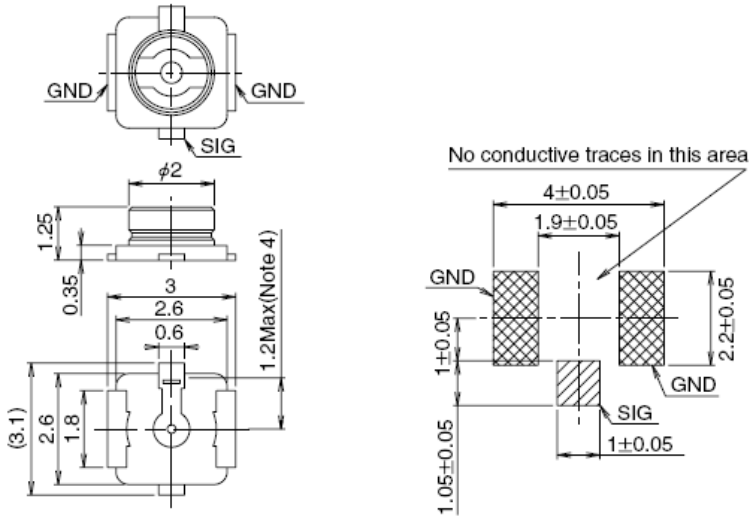

Figure 15: Dimensions of the Receptacle RF Connectors (Unit: mm)

U.FL-LP mating plugs listed in the following figure can be used to match the receptacles.

Part No.	U.FL-LP-040	U.FL-LP-066	U.FL-LP(V)-040	U.FL-LP-062	U.FL-LP-088
	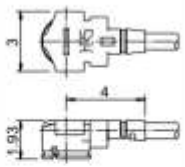	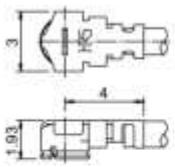	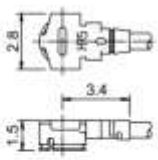	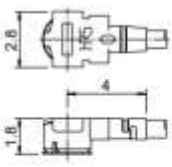	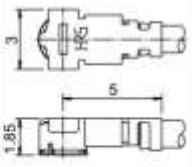
Mated Height	2.5mm Max. (2.4mm Nom.)	2.5mm Max. (2.4mm Nom.)	2.0mm Max. (1.9mm Nom.)	2.4mm Max. (2.3mm Nom.)	2.4mm Max. (2.3mm Nom.)
Applicable cable	Dia. 0.81mm Coaxial cable	Dia. 1.13mm and Dia. 1.32mm Coaxial cable	Dia. 0.81mm Coaxial cable	Dia. 1mm Coaxial cable	Dia. 1.37mm Coaxial cable
Weight (mg)	53.7	59.1	34.8	45.5	71.7
RoHS	YES				

Figure 16: Mechanicals of U.FL-LP Mating Plugs

The following figure describes the space factor of mating plugs.

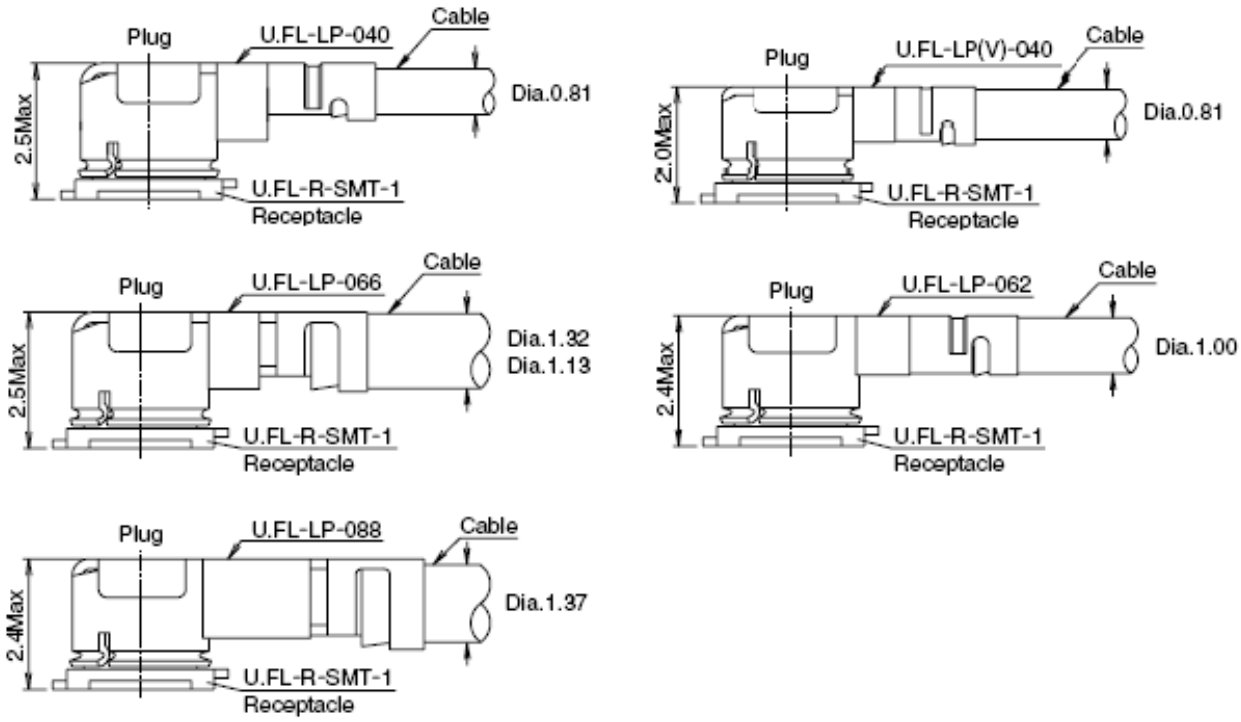

Figure 17: Space Factor of Mating Plugs (Unit: mm)

For more details of the recommended mating plugs, please visit http://www.hirose.com.

6 Reliability, Radio and Electrical Characteristics

6.1. General Description

This chapter mainly describes the following electrical and radio characteristics of EC21 series Mini PCIe:

- Power supply requirements
- Digital I/O characteristic
- Tx power
- Rx sensitivity
- ESD
- Power consumption
- Thermal dissipation

6.2. Power Supply Requirements

The input voltage of EC21 series Mini PCIe is 3.0–3.6 V, as specified by *PCI Express Mini Card Electromechanical Specification Revision 1.2*. The following table shows the power supply requirements of EC21 series Mini PCIe.

Table 21: Power Supply Requirements

Parameter	Description	Min.	Typ.	Max.	Unit
VCC_3V3	Power supply	3.0	3.3	3.6	V

6.3. Digital I/O Characteristic

The following table shows the I/O requirements of EC21 series Mini PCIe.

Table 22: I/O Requirements

Parameter	Description	Min.	Max.	Unit
V_{IH}	Input high voltage	0.7 × VCC_3V3	VCC_3V3 + 0.3	V
V_{IL}	Input low voltage	-0.3	0.3 × VCC_3V3	V
V_{OH}	Output high voltage	VCC_3V3 - 0.5	VCC_3V3	V
V_{OL}	Output low voltage	0	0.4	V

NOTE

1. The PCM and I2C interfaces are 1.8 V power domain and other I/O interfaces are VCC_3V3 power domain.
2. The maximum voltage value of V_{IL} for PERST# and W_DISABLE# is 0.5 V.

6.4. Tx Power

The following tables show the conducted RF output power of EC21 series Mini PCIe module.

Table 23: Conducted RF Output Power of EC21 Series Mini PCIe

Frequency Bands	Max. RF Output Power	Min. RF Output Power
GSM850/EGSM900	33 dBm ±2 dB	5 dBm ±5 dB
DCS1800/PCS1900	30 dBm ±2 dB	0 dBm ±5 dB
GSM850/EGSM900 (8-PSK)	27 dBm ±3 dB	5 dBm ±5 dB
DCS1800/PCS1900 (8-PSK)	26 dBm ±3 dB	0 dBm ±5 dB
WCDMA bands	24 dBm +1/-3 dB	< -49 dBm
LTE-FDD bands	23 dBm ±2 dB	< -39 dBm

LTE-TDD bands	23 dBm ±2 dB	< -39 dBm

NOTE

In GPRS 4 slots TX mode, the maximum output power is reduced by 3.0 dB. The design conforms to the GSM specification as described in ***Chapter 13.16*** of *3GPP TS 51.010-1*.

6.5. Rx Sensitivity

Table 24: Conducted RF Receiving Sensitivity of EC21-E Mini PCIe

Frequency Bands	Receiving Sensitivity (Typ.)			3GPP (SIMO)
	Primary	Diversity	SIMO [6]	
EGSM900	-109.0 dBm	-	-	-102.0 dBm
DCS1800	-109.0 dBm	-	-	-102.0 dBm
WCDMA B1	-110.5 dBm	-	-	-106.7 dBm
WCDMA B5	-110.5 dBm	-	-	-104.7 dBm
WCDMA B8	-110.5 dBm	-	-	-103.7 dBm
LTE-FDD B1 (10 MHz)	-98.0 dBm	-98.0 dBm	-101.5 dBm	-96.3 dBm
LTE-FDD B3 (10 MHz)	-96.5 dBm	-98.5 dBm	-101.5 dBm	-93.3 dBm
LTE-FDD B5 (10 MHz)	-98.0 dBm	-98.5 dBm	-101.0 dBm	-94.3 dBm
LTE-FDD B7 (10 MHz)	-97.0 dBm	-97.0 dBm	-99.5 dBm	-94.3 dBm
LTE-FDD B8 (10 MHz)	-97.0 dBm	-97.0 dBm	-101.0 dBm	-93.3 dBm
LTE-FDD B20 (10 MHz)	-97.5 dBm	-99.0 dBm	-102.5 dBm	-93.3 dBm

[6] SIMO is a smart antenna technology that uses a single antenna at the transmitter side and two antennas at the receiver side, which can improve Rx performance.

Table 25: Conducted RF Receiving Sensitivity of EC21-A Mini PCIe

Frequency Bands	Receiving Sensitivity (Typ.)			3GPP (SIMO)
	Primary	Diversity	SIMO [6]	
WCDMA B2	-110.0 dBm	-	-	-104.7 dBm
WCDMA B4	-110.0 dBm	-	-	-106.7 dBm
WCDMA B5	-110.5 dBm	-	-	-104.7 dBm
LTE-FDD B2 (10 MHz)	-98.0 dBm	-98.0 dBm	-101.0 dBm	-94.3 dBm
LTE-FDD B4 (10 MHz)	-97.5 dBm	-99.0 dBm	-101.0 dBm	-96.3 dBm
LTE-FDD B12 (10 MHz)	-97.2 dBm	-98.0 dBm	-101.0 dBm	-93.3 dBm

Table 26: Conducted RF Receiving Sensitivity of EC21-V Mini PCIe

Frequency Bands	Receiving Sensitivity (Typ.)			3GPP (SIMO)
	Primary	Diversity	SIMO [6]	
LTE-FDD B4 (10 MHz)	-97.5 dBm	-99.0 dBm	-101.0 dBm	-96.3 dBm
LTE-FDD B13 (10 MHz)	-97.7 dBm	-97.0 dBm	-100.0 dBm	-93.3 dBm

Table 27: Conducted RF Receiving Sensitivity of EC21-AUT Mini PCIe

Frequency Bands	Receiving Sensitivity (Typ.)			3GPP (SIMO)
	Primary	Diversity	SIMO [6]	
WCDMA B1	-110.0 dBm	-	-	-106.7 dBm
WCDMA B5	-110.5 dBm	-	-	-104.7 dBm
LTE-FDD B1 (10 MHz)	-98.5 dBm	-98.0 dBm	-101.0 dBm	-96.3 dBm
LTE-FDD B3 (10 MHz)	-98.0 dBm	-97.0 dBm	-100.0 dBm	-93.3 dBm
LTE-FDD B5 (10 MHz)	-98.0 dBm	-99.0 dBm	-102.5 dBm	-94.3 dBm
LTE-FDD B7 (10 MHz)	-97.0 dBm	-97.0 dBm	-98.5 dBm	-94.3 dBm

LTE-FDD B28 (10 MHz)	-97.0 dBm	-99.0 dBm	-102.0 dBm	-94.8 dBm

Table 28: Conducted RF Receiving Sensitivity of EC21-AU Mini PCIe

Frequency Bands	Receiving Sensitivity (Typ.)			3GPP (SIMO)
	Primary	Diversity	SIMO [6]	
GSM850	-109.0 dBm	-	-	-102.0 dBm
EGSM900	-109.0 dBm	-	-	-102.0 dBm
DCS1800	-109.0 dBm	-	-	-102.0 dBm
PCS1900	-109.0 dBm	-	-	-102.0 dBm
WCDMA B1	-110.0 dBm	-	-	-106.7 dBm
WCDMA B2	-110.0 dBm	-	-	-104.7 dBm
WCDMA B5	-111.0 dBm	-	-	-104.7 dBm
WCDMA B8	-111.0 dBm	-	-	-103.7 dBm
LTE-FDD B1 (10 MHz)	-97.2 dBm	-97.5 dBm	-100.2 dBm	-96.3 dBm
LTE-FDD B2 (10 MHz)	-98.2 dBm	-	-	-94.3 dBm
LTE-FDD B3 (10 MHz)	-98.7 dBm	-98.6 dBm	-102.2 dBm	-93.3 dBm
LTE-FDD B4 (10 MHz)	-97.7 dBm	-97.4 dBm	-100.2 dBm	-96.3 dBm
LTE-FDD B5 (10 MHz)	-98.0 dBm	-98.2 dBm	-101.0 dBm	-94.3 dBm
LTE-FDD B7 (10 MHz)	-97.7 dBm	-97.7 dBm	-101.2 dBm	-94.3 dBm
LTE-FDD B8 (10 MHz)	-99.2 dBm	-98.2 dBm	-102.2 dBm	-93.3 dBm
LTE-FDD B28 (10 MHz)	-98.6 dBm	-98.7 dBm	-102.0 dBm	-94.8 dBm
LTE-TDD B40 (10 MHz)	-97.2 dBm	-98.4 dBm	-101.2 dBm	-96.3 dBm

Table 29: Conducted RF Receiving Sensitivity of EC21-J Mini PCIe

Frequency Bands	Receiving Sensitivity (Typ.)			3GPP (SIMO)
	Primary	Diversity	SIMO [6]	
LTE-FDD B1 (10 MHz)	-97.5 dBm	-98.7 dBm	-100.2 dBm	-96.3 dBm
LTE-FDD B3 (10 MHz)	-96.5 dBm	-97.1 dBm	-100.5 dBm	-93.3 dBm
LTE-FDD B8 (10 MHz)	-98.4 dBm	-99.0 dBm	-101.2 dBm	-93.3 dBm
LTE-FDD B18 (10 MHz)	-99.5 dBm	-99.0 dBm	-101.7 dBm	-96.3 dBm
LTE-FDD B19 (10 MHz)	-99.2 dBm	-99.0 dBm	-101.4 dBm	-96.3 dBm
LTE-FDD B26 (10 MHz)	-99.5 dBm	-99.0 dBm	-101.5 dBm	-93.8 dBm

Table 30: Conducted RF Receiving Sensitivity of EC21-KL Mini PCIe

Frequency Bands	Receiving Sensitivity (Typ.)			3GPP (SIMO)
	Primary	Diversity	SIMO [6]	
LTE-FDD B1 (10 MHz)	-98.0 dBm	-99.5 dBm	-100.5 dBm	-96.3 dBm
LTE-FDD B3 (10 MHz)	-97.0 dBm	-97.5 dBm	-99.5 dBm	-93.3 dBm
LTE-FDD B5 (10 MHz)	-98.0 dBm	-99.5 dBm	-100.5 dBm	-94.3 dBm
LTE-FDD B7 (10 MHz)	-96.0 dBm	-96.0 dBm	-98.5 dBm	-94.3 dBm
LTE-FDD B8 (10 MHz)	-97.0 dBm	-99.0 dBm	-101.0 dBm	-93.3 dBm

Table 31: Conducted RF Receiving Sensitivity of EC21-EU Mini PCIe

Frequency Bands	Receiving Sensitivity (Typ.)			3GPP (SIMO)
	Primary	Diversity	SIMO [6]	
EGSM900	-108.5 dBm	-	-	-102.0 dBm
DCS1800	-108.5 dBm	-	-	-102.0 dBm
WCDMA B1	-110 dBm	-	-	-106.7 dBm

WCDMA B8	-110 dBm	-	-	-103.7 dBm
LTE-FDD B1 (10 MHz)	-98.5 dBm	-99 dBm	-101.2 dBm	-96.3 dBm
LTE-FDD B3 (10 MHz)	-97.8 dBm	-99.7 dBm	-101.7 dBm	-93.3 dBm
LTE-FDD B7 (10 MHz)	-96.7 dBm	-98.5 dBm	-99.7 dBm	-94.3 dBm
LTE-FDD B8 (10 MHz)	-98.7 dBm	-100 dBm	-102.2 dBm	-93.3 dBm
LTE-FDD B20 (10 MHz)	-98.7 dBm	-99.5 dBm	-102.2 dBm	-93.3 dBm
LTE-FDD B28A (10 MHz)	-99 dBm	-100 dBm	-102.2 dBm	-94.8 dBm

Table 32: Conducted RF Receiving Sensitivity of EC21-AUX Mini PCIe

Frequency Bands	Receiving Sensitivity (Typ.)			3GPP (SIMO)
	Primary	Diversity	SIMO [6]	
GSM850	-109.0 dBm	-	-	-102.0 dBm
EGSM900	-109.0 dBm	-	-	-102.0 dBm
DCS1800	-109.0 dBm	-	-	-102.0 dBm
PCS1900	-109.0 dBm	-	-	-102.0 dBm
WCDMA B1	-110.0 dBm	-109.5 dBm	-112 dBm	-106.7 dBm
WCDMA B2	-110.5 dBm	-	-	-104.7 dBm
WCDMA B4	-110.0 dBm	-110 dBm	-112 dBm	-104.7 dBm
WCDMA B5	-111.0 dBm	-112 dBm	-113 dBm	-104.7 dBm
WCDMA B8	-111.0 dBm	-112 dBm	-113 dBm	-103.7 dBm
LTE-FDD B1 (10 MHz)	-98.0 dBm	-97.7 dBm	-101.2 dBm	-96.3 dBm
LTE-FDD B2 (10 MHz)	-98.5 dBm	-	-	-94.3 dBm
LTE-FDD B3 (10 MHz)	-99.0 dBm	-98.8 dBm	-102.2 dBm	-93.3 dBm
LTE-FDD B4 (10 MHz)	-97.7 dBm	-97.6 dBm	-100.2 dBm	-96.3 dBm
LTE-FDD B5 (10 MHz)	-98.5 dBm	-98.2 dBm	-101.0 dBm	-94.3 dBm

LTE-FDD B7 (10 MHz)	-97.7 dBm	-97.7 dBm	-101.2 dBm	-94.3 dBm
LTE-FDD B8 (10 MHz)	-99.0 dBm	-98.5 dBm	-102.2 dBm	-93.3 dBm
LTE-FDD B28 (10 MHz)	-98.0 dBm	-98.7 dBm	-101.5 dBm	-94.8 dBm
LTE-TDD B40 (10 MHz)	-97.5 dBm	-98.2 dBm	-101.2 dBm	-96.3 dBm

Table 33: Conducted RF Receiving Sensitivity of EC21-EUX Mini PCIe

Frequency Bands	Receiving Sensitivity (Typ.)			3GPP (SIMO)
	Primary	Diversity	SIMO [6]	
EGSM900	-109.0 dBm	-	-	-102.0 dBm
DCS1800	-109.0 dBm	-	-	-102.0 dBm
WCDMA B1	-110.5 dBm	-	-	-106.7 dBm
WCDMA B8	-110.5 dBm	-	-	-103.7 dBm
LTE-FDD B1 (10 MHz)	-98.0 dBm	-98.0 dBm	-101.0 dBm	-96.3 dBm
LTE-FDD B3 (10 MHz)	-98.5 dBm	-98.5 dBm	-101.0 dBm	-93.3 dBm
LTE-FDD B7 (10 MHz)	-97.0 dBm	-96.0 dBm	-99.5 dBm	-94.3 dBm
LTE-FDD B8 (10 MHz)	-98.5 dBm	-97.0 dBm	-101.0 dBm	-93.3 dBm
LTE-FDD B20 (10 MHz)	-97.5 dBm	-99.0 dBm	-100.5 dBm	-93.3 dBm
LTE-FDD B28A (10 MHz)	-98.0 dBm	-98.7 dBm	-101.0 dBm	-94.8 dBm

6.6. ESD

The module is not protected against electrostatics discharge (ESD) in general. Consequently, it is subject to ESD handling precautions that typically apply to ESD sensitive components. You must apply proper ESD handling and packaging procedures throughout the processing, handling and operation of any application that incorporates the module.

The following table shows the ESD characteristics of EC21 series Mini PCIe.

Table 34: ESD Characteristics of EC21 Series Mini PCIe

Tested Interfaces	Contact Discharge	Air Discharge	Unit
Power Supply and GND	±5	±10	kV
Antenna Interfaces	±4	±8	kV
USB Interface	±4	±8	kV
(U)SIM Interface	±4	±8	kV
Others	±0.5	±1	kV

6.7. Power Consumption

The following tables describe the power consumption of EC21 series Mini PCIe series module.

Table 35: Power Consumption of EC21-E Mini PCIe

Description	Conditions	Typ.	Unit
Sleep state	**AT+CFUN=0** (USB Disconnected)	2.54	mA
	AT+CFUN=0 (USB Suspend)	2.75	mA
	EGSM900 DRX = 2 (USB Disconnected)	4.46	mA
	EGSM900 DRX = 9 (USB Disconnected)	4.24	mA
	WCDMA PF = 64 (USB Disconnected)	3.74	mA
	WCDMA PF = 128 (USB Disconnected)	3.23	mA
	LTE-FDD PF = 64 (USB Disconnected)	4.8	mA
	LTE-FDD PF = 128 (USB Disconnected)	3.92	mA
Idle state	EGSM900 DRX = 5 (USB Disconnected)	29.5	mA
	EGSM900 DRX = 5 (USB Active)	43.2	mA
	WCDMA PF = 64 (USB Disconnected)	29.4	mA
	WCDMA PF = 64 (USB Active)	43.1	mA

	LTE-FDD PF = 64 (USB Disconnected)	29.9	mA
	LTE-FDD PF = 64 (USB Active)	43.4	mA
GPRS data transfer (GNSS OFF)	EGSM900 4DL/1UL @ 33.01 dBm	342.1	mA
	EGSM900 3DL/2UL @ 32.99 dBm	601.7	mA
	EGSM900 2DL/3UL @ 30.75 dBm	661.4	mA
	EGSM900 1DL/4UL @ 29.42 dBm	758	mA
	DCS1800 4DL/1UL @ 30.04 dBm	245.3	mA
	DCS1800 3DL/2UL @ 29.99 dBm	408.2	mA
	DCS1800 2DL/3UL @ 29.86 dBm	556.2	mA
	DCS1800 1DL/4UL @ 29.69 dBm	995.9	mA
EDGE data transfer (GNSS OFF)	EGSM900 4DL/1UL PCL = 8 @ 27.09 dBm	207.7	mA
	EGSM900 3DL/2UL PCL = 8 @ 26.98 dBm	342.5	mA
	EGSM900 2DL/3UL PCL = 8 @ 26.78 dBm	464.5	mA
	EGSM900 1DL/4UL PCL = 8 @ 26.74 dBm	588.9	mA
	DCS1800 4DL/1UL PCL = 2 @ 25.91 dBm	199.8	mA
	DCS1800 3DL/2UL PCL = 2 @ 25.83 dBm	324	mA
	DCS1800 2DL/3UL PCL = 2 @ 25.53 dBm	436.8	mA
	DCS1800 1DL/4UL PCL = 2 @ 26.39 dBm	545.5	mA
WCDMA data transfer (GNSS OFF)	WCDMA B1 HSDPA @ 22.19 dBm	820.1	mA
	WCDMA B1 HSUPA @ 21.91 dBm	840.1	mA
	WCDMA B5 HSDPA @ 22.87 dBm	876.8	mA
	WCDMA B5 HSUPA @ 21.76 dBm	824.5	mA
	WCDMA B8 HSDPA @ 22.24 dBm	704.9	mA
	WCDMA B8 HSUPA @ 21.57 dBm	667.1	mA
LTE data transfer	LTE-FDD B1 @ 23.68 dBm	978.2	mA

(GNSS OFF)	LTE-FDD B3 @ 22.84 dBm	1018.6	mA
	LTE-FDD B5 @ 23.36 dBm	1025.8	mA
	LTE-FDD B7 @ 22.90 dBm	1073.4	mA
	LTE-FDD B8 @ 23.40 dBm	882.0	mA
	LTE-FDD B20 @ 23.44 dBm	940.2	mA
WCDMA voice call	WCDMA B1 @ 22.91 dBm	901.8	mA
	WCDMA B5 @ 23.15 dBm	904.7	mA
	WCDMA B8 @ 23.15 dBm	741.2	mA

Table 36: Power Consumption of EC21-A Mini PCIe

Description	Conditions	Typ.	Unit
Sleep state	**AT+CFUN=0** (USB Disconnected)	3.5	mA
	WCDMA PF = 64 (USB Disconnected)	5.0	mA
	WCDMA PF = 128 (USB Disconnected)	4.4	mA
	LTE-FDD PF = 64 (USB Disconnected)	5.3	mA
	LTE-FDD PF = 128 (USB Disconnected)	4.5	mA
Idle state	WCDMA PF = 64 (USB Disconnected)	32.0	mA
	WCDMA PF = 64 (USB Connected)	45.0	mA
	LTE-FDD PF = 64 (USB Disconnected)	32.0	mA
	LTE-FDD PF = 64 (USB Connected)	45.0	mA
WCDMA data transfer (GNSS OFF)	WCDMA B2 HSDPA @ 21.59 dBm	582.0	mA
	WCDMA B2 HSUPA @ 22.17 dBm	675.0	mA
	WCDMA B4 HSDPA @ 21.47 dBm	575.0	mA
	WCDMA B4 HSUPA @ 21.73 dBm	637.0	mA
	WCDMA B5 HSDPA @ 20.02 dBm	686.0	mA

	WCDMA B5 HSUPA @ 20.18 dBm	577.0	mA
LTE data transfer (GNSS OFF)	LTE-FDD B2 @ 22.93 dBm	926.0	mA
	LTE-FDD B4 @ 22.72 dBm	934.0	mA
	LTE-FDD B12 @ 23.26 dBm	835.0	mA
WCDMA voice call	WCDMA B2 @ 22.88 dBm	610.0	mA
	WCDMA B4 @ 23.21 dBm	743.0	mA
	WCDMA B5 @ 23.13 dBm	643.0	mA

Table 37: Power Consumption of EC21-V Mini PCIe

Description	Conditions	Typ.	Unit
Sleep state	**AT+CFUN=0** (USB Disconnected)	3.8	mA
	LTE-FDD PF = 64 (USB Disconnected)	5.3	mA
	LTE-FDD PF = 128 (USB Disconnected)	4.9	mA
Idle state	LTE-FDD PF = 64 (USB Disconnected)	30.0	mA
	LTE-FDD PF = 64 (USB Connected)	42.0	mA
LTE data transfer (GNSS OFF)	LTE-FDD B4 @ 23.59 dBm	997.0	mA
	LTE-FDD B13 @ 24.05 dBm	724.0	mA

Table 38: Power Consumption of EC21-AU Mini PCIe

Description	Conditions	Typ.	Unit
Sleep state	**AT+CFUN=0** (USB Disconnected)	2.8	mA
	GSM850 DRX = 2 (USB Disconnected)	4.3	mA
	GSM850 DRX = 9 (USB Disconnected)	3.3	mA
	WCDMA PF = 64 (USB Disconnected)	3.5	mA
	WCDMA PF = 128 (USB Disconnected)	3.1	mA
	LTE-FDD PF = 64 (USB Disconnected)	4.6	mA

	LTE-FDD PF = 128 (USB Disconnected)	3.9	mA
	LTE-TDD PF = 64 (USB Disconnected)	4.7	mA
	LTE-TDD PF = 128 (USB Disconnected)	3.9	mA
Idle state	GSM850 DRX = 5 (USB Disconnected)	24.1	mA
	GSM850 DRX = 5 (USB Connected)	37.4	mA
	WCDMA PF = 64 (USB Disconnected)	25.4	mA
	WCDMA PF = 64 (USB Connected)	38.4	mA
	LTE-FDD PF = 64 (USB Disconnected)	25.4	mA
	LTE-FDD PF = 64 (USB Connected)	38.8	mA
	LTE-TDD PF = 64 (USB Disconnected)	25.8	mA
	LTE-TDD PF = 64 (USB Connected)	39.0	mA
GPRS data transfer (GNSS OFF)	GSM850 4DL/1UL @ 32.62 dBm	312.8	mA
	GSM850 3DL/2UL @ 32.52 dBm	530.6	mA
	GSM850 2DL/3UL @ 30.53 dBm	602.5	mA
	GSM850 1DL/4UL @ 29.27 dBm	686.0	mA
	EGSM900 4DL/1UL @ 32.76 dBm	344.5	mA
	EGSM900 3DL/2UL @ 32.80 dBm	590.8	mA
	EGSM900 2DL/3UL @ 30.52 dBm	657.3	mA
	EGSM900 1DL/4UL @ 29.49 dBm	752.4	mA
	DCS1800 4DL/1UL @ 30.05 dBm	229.1	mA
	DCS1800 3DL/2UL @ 30.02 dBm	365.2	mA
	DCS1800 2DL/3UL @ 29.73 dBm	501.5	mA
	DCS1800 1DL/4UL @ 29.62 dBm	637.5	mA
	PCS1900 4DL/1UL @ 29.82 dBm	228.2	mA
	PCS1900 3DL/2UL @ 29.92 dBm	366.9	mA

	PCS1900 2DL/3UL @ 29.76 dBm	496.2	mA
	PCS1900 1DL/4UL @ 29.35 dBm	628.4	mA
EDGE data transfer (GNSS OFF)	GSM850 4DL/1UL PCL = 8 @ 26.62 dBm	191.0	mA
	GSM850 3DL/2UL PCL = 8 @ 26.56 dBm	303.0	mA
	GSM850 2DL/3UL PCL = 8 @ 26.39 dBm	414.2	mA
	GSM850 1DL/4UL PCL = 8 @ 26.25 dBm	537.2	mA
	EGSM900 4DL/1UL PCL = 8 @ 26.74 dBm	196.3	mA
	EGSM900 3DL/2UL PCL = 8 @ 26.91 dBm	343.9	mA
	EGSM900 2DL/3UL PCL = 8 @ 26.78 dBm	449.6	mA
	EGSM900 1DL/4UL PCL = 8 @ 26.67 dBm	570.8	mA
	DCS1800 4DL/1UL PCL = 2 @ 26.33 dBm	199.2	mA
	DCS1800 3DL/2UL PCL = 2 @ 26.65 dBm	306.3	mA
	DCS1800 2DL/3UL PCL = 2 @ 26.33 dBm	419.8	mA
	DCS1800 1DL/4UL PCL = 2 @ 26.35 dBm	540.1	mA
	PCS1900 4DL/1UL PCL = 2 @ 26.01 dBm	186.5	mA
	PCS1900 3DL/2UL PCL = 2 @ 26.45 dBm	315.3	mA
	PCS1900 2DL/3UL PCL = 2 @ 26.12 dBm	406.6	mA
	PCS1900 1DL/4UL PCL = 2 @ 26.09 dBm	524.5	mA
WCDMA data transfer (GNSS OFF)	WCDMA B1 HSDPA @ 22.30 dBm	758.3	mA
	WCDMA B1 HSUPA @ 21.62 dBm	755.7	mA
	WCDMA B2 HSDPA @ 21.93 dBm	792.0	mA
	WCDMA B2 HSUPA @ 21.99 dBm	799.1	mA
	WCDMA B5 HSDPA @ 22.44 dBm	746.5	mA
	WCDMA B5 HSUPA @ 22.14 dBm	741.1	mA
	WCDMA B8 HSDPA @ 21.62 dBm	625.1	mA

	WCDMA B8 HSUPA @ 21.65 dBm	647.4	mA
LTE data transfer (GNSS OFF)	LTE-FDD B1 @ 23.71 dBm	1025.4	mA
	LTE-FDD B2 @ 23.00 dBm	996.0	mA
	LTE-FDD B3 @ 23.34 dBm	950.1	mA
	LTE-FDD B4 @ 23.05 dBm	892.1	mA
	LTE-FDD B5 @ 22.84 dBm	816.1	mA
	LTE-FDD B7 @ 22.77 dBm	1198.1	mA
	LTE-FDD B8 @ 23.04 dBm	807.4	mA
	LTE-FDD B28 @ 23.54 dBm	932.0	mA
	LTE-TDD B40 @ 23.79 dBm	585.2	mA
GSM voice call	GSM850 PCL = 5 @ 32.80 dBm	316.2	mA
	EGSM900 PCL = 5 @ 33.16 dBm	348.7	mA
	DCS1800 PCL = 0 @ 29.81 dBm	216.8	mA
	PCS1900 PCL = 0 @ 29.79 dBm	214.9	mA
WCDMA voice call	WCDMA B1 @ 23.27 dBm	823.4	mA
	WCDMA B2 @ 22.89 dBm	898.7	mA
	WCDMA B5 @ 22.87 dBm	776.9	mA
	WCDMA B8 @ 22.89 dBm	685.6	mA

Table 39: Power Consumption of EC21-J Mini PCIe

Description	Conditions	Typ.	Unit
Sleep state	**AT+CFUN=0** (USB Disconnected)	2.5	mA
	LTE-FDD PF = 64 (USB Disconnected)	4.0	mA
	LTE-FDD PF = 128 (USB Disconnected)	3.3	mA
Idle state	LTE-FDD PF = 64 (USB Disconnected)	27.0	mA

	LTE-FDD PF = 64 (USB Connected)	38.4	mA
LTE data transfer (GNSS OFF)	LTE-FDD B1 @ 22.97 dBm	859.7	mA
	LTE-FDD B3 @ 22.67 dBm	841.1	mA
	LTE-FDD B8 @ 23.00 dBm	752.3	mA
	LTE-FDD B18 @ 23.54 dBm	758.6	mA
	LTE-FDD B19 @ 23.61 dBm	760.4	mA
	LTE-FDD B26 @ 22.64 dBm	741.2	mA

Table 40: Power Consumption of EC21-KL Mini PCIe

Description	Conditions	Typ.	Unit
Sleep state	**AT+CFUN=0** (USB Disconnected)	3.5	mA
	LTE-FDD PF = 64 (USB Disconnected)	5.6	mA
	LTE-FDD PF = 128 (USB Disconnected)	4.7	mA
Idle state	LTE-FDD PF = 64 (USB Disconnected)	35.0	mA
	LTE-FDD PF = 64 (USB Connected)	49.0	mA
LTE data transfer (GNSS OFF)	LTE-FDD B1 @ 22.78 dBm	972.0	mA
	LTE-FDD B3 @ 23.03 dBm	974.0	mA
	LTE-FDD B5 @ 23.03 dBm	764.0	mA
	LTE-FDD B7 @ 22.89 dBm	959.0	mA
	LTE-FDD B8 @ 22.86 dBm	839.0	mA

Table 41: Power Consumption of EC21-EU Mini PCIe

Description	Conditions	Typ.	Unit
Sleep state	**AT+CFUN=0** (USB Disconnected)	3.6	mA
	EGSM900 DRX = 2 (USB Disconnected)	5.3	mA
	EGSM900 DRX = 9 (USB Disconnected)	4.2	mA

	WCDMA PF = 64 (USB Disconnected)	5.1	mA
	WCDMA PF = 128 (USB Disconnected)	4.5	mA
	LTE-FDD PF = 64 (USB Disconnected)	5.6	mA
	LTE-FDD PF = 128 (USB Disconnected)	4.8	mA
Idle state	EGSM900 DRX = 5 (USB Disconnected)	24.7	mA
	EGSM900 DRX = 5 (USB Connected)	38.0	mA
	WCDMA PF = 64 (USB Disconnected)	25.3	mA
	WCDMA PF = 64 (USB Connected)	38.0	mA
	LTE-FDD PF = 64 (USB Disconnected)	26.0	mA
	LTE-FDD PF = 64 (USB Connected)	37.0	mA
GPRS data transfer (GNSS OFF)	EGSM900 4DL/1UL @ 33.39 dBm	389.3	mA
	EGSM900 3DL/2UL @ 32.47 dBm	593.6	mA
	EGSM900 2DL/3UL @ 29.49 dBm	611.6	mA
	EGSM900 1DL/4UL @ 28.05 dBm	682.1	mA
	DCS1800 4DL/1UL @ 31.44 dBm	260.9	mA
	DCS1800 3DL/2UL @ 30.38 dBm	391.2	mA
	DCS1800 2DL/3UL @ 28.27 dBm	464.2	mA
	DCS1800 1DL/4UL @ 27.01 dBm	550.5	mA
EDGE data transfer (GNSS OFF)	EGSM900 4DL/1UL PCL = 8 @ 26.39 dBm	198.6	mA
	EGSM900 3DL/2UL PCL = 8 @ 25.39 dBm	303.9	mA
	EGSM900 2DL/3UL PCL = 8 @ 23.34 dBm	372.8	mA
	EGSM900 1DL/4UL PCL = 8 @ 22.26 dBm	451.4	mA
	DCS1800 4DL/1UL PCL = 2 @ 26.49 dBm	190.5	mA
	DCS1800 3DL/2UL PCL = 2 @ 25.23 dBm	300.4	mA
	DCS1800 2DL/3UL PCL = 2 @ 22.96 dBm	394.8	mA

	DCS1800 1DL/4UL PCL = 2 @ 22.08 dBm	496.9	mA
WCDMA data transfer (GNSS OFF)	WCDMA B1 HSDPA @ 23.00 dBm	754.6	mA
	WCDMA B1 HSUPA @ 22.57 dBm	662.3	mA
	WCDMA B8 HSDPA @ 22.97 dBm	749.9	mA
	WCDMA B8 HSUPA @ 22.52 dBm	662.5	mA
LTE data transfer (GNSS OFF)	LTE-FDD B1 @ 22.09 dBm	875.2	mA
	LTE-FDD B3 @ 22.42 dBm	938.3	mA
	LTE-FDD B7 @ 22.21 dBm	1036.0	mA
	LTE-FDD B8 @ 23.37 dBm	897.5	mA
	LTE-FDD B20 @ 22.72 dBm	913.0	mA
	LTE-FDD B28A @ 21.72 dBm	898.8	mA
GSM voice call	EGSM900 PCL = 5 @ 33.53 dBm	385.0	mA
	DCS1800 PCL = 0 @ 31.20 dBm	256.0	mA
WCDMA voice call	WCDMA B1 @ 23.45 dBm	794.6	mA
	WCDMA B8 @ 23.51 dBm	792.0	mA

Table 42: Power Consumption of EC21-AUX Mini PCIe

Description	Conditions	Typ.	Unit
Sleep state	**AT+CFUN=0** (USB Disconnected)	1.79	mA
	GSM850 DRX = 2 (USB Disconnected)	3.06	mA
	GSM850 DRX = 9 (USB Disconnected)	2.36	mA
	WCDMA PF = 64 (USB Disconnected)	3.70	mA
	WCDMA PF = 128 (USB Disconnected)	3.28	mA
	LTE-FDD PF = 64 (USB Disconnected)	4.41	mA
	LTE-FDD PF = 128 (USB Disconnected)	3.59	mA

	LTE-TDD PF = 64 (USB Disconnected)	4.45	mA
	LTE-TDD PF = 128 (USB Disconnected)	3.68	mA
Idle state	GSM850 DRX = 5 (USB Disconnected)	22.4	mA
	GSM850 DRX = 5 (USB Connected)	42.8	mA
	WCDMA PF = 64 (USB Disconnected)	23.1	mA
	WCDMA PF = 64 (USB Connected)	43.4	mA
	LTE-FDD PF = 64 (USB Disconnected)	30.7	mA
	LTE-FDD PF = 64 (USB Connected)	43.5	mA
	LTE-TDD PF = 64 (USB Disconnected)	31.2	mA
	LTE-TDD PF = 64 (USB Connected)	43.8	mA
GPRS data transfer (GNSS OFF)	GSM850 4DL/1UL @ 32.50 dBm	335.0	mA
	GSM850 3DL/2UL @ 31.69 dBm	537.0	mA
	GSM850 2DL/3UL @ 29.48 dBm	605.0	mA
	GSM850 1DL/4UL @ 28.35 dBm	701.0	mA
	EGSM900 4DL/1UL @ 33.50 dBm	386.0	mA
	EGSM900 3DL/2UL @ 32.04 dBm	563.0	mA
	EGSM900 2DL/3UL @ 29.52 dBm	606.0	mA
	EGSM900 1DL/4UL @ 28.45 dBm	703.0	mA
	DCS1800 4DL/1UL @ 29.72 dBm	194.0	mA
	DCS1800 3DL/2UL @ 28.82 dBm	291.0	mA
	DCS1800 2DL/3UL @ 26.79 dBm	361.0	mA
	DCS1800 1DL/4UL @ 25.71 dBm	450.0	mA
	PCS1900 4DL/1UL @ 29.44 dBm	202.0	mA
	PCS1900 3DL/2UL @ 28.60 dBm	306.0	mA
	PCS1900 2DL/3UL @ 26.46 dBm	370.0	mA

	PCS1900 1DL/4UL @ 25.36 dBm	456.0	mA
EDGE data transfer (GNSS OFF)	GSM850 4DL/1UL PCL = 8 @ 27.08 dBm	223.0	mA
	GSM850 3DL/2UL PCL = 8 @ 25.80 dBm	370.0	mA
	GSM850 2DL/3UL PCL = 8 @ 23.80 dBm	492.0	mA
	GSM850 1DL/4UL PCL = 8 @ 22.60 dBm	623.0	mA
	EGSM900 4DL/1UL PCL = 8 @ 27.42 dBm	227.0	mA
	EGSM900 3DL/2UL PCL = 8 @ 26.23 dBm	371.0	mA
	EGSM900 2DL/3UL PCL = 8 @ 24.10 dBm	492.0	mA
	EGSM900 1DL/4UL PCL = 8 @ 22.80 dBm	626.0	mA
	DCS1800 4DL/1UL PCL = 2 @ 26.50 dBm	171.0	mA
	DCS1800 3DL/2UL PCL = 2 @ 25.50 dBm	280.0	mA
	DCS1800 2DL/3UL PCL = 2 @ 23.60 dBm	387.0	mA
	DCS1800 1DL/4UL PCL = 2 @ 22.37 dBm	504.0	mA
	PCS1900 4DL/1UL PCL = 2 @ 26.26 dBm	170.0	mA
	PCS1900 3DL/2UL PCL = 2 @ 25.30 dBm	280.0	mA
	PCS1900 2DL/3UL PCL = 2 @ 23.10 dBm	389.0	mA
	PCS1900 1DL/4UL PCL = 2 @ 21.97 dBm	508.0	mA
WCDMA data transfer (GNSS OFF)	WCDMA B1 HSDPA @ 21.57 dBm	650.0	mA
	WCDMA B1 HSUPA @ 21.79 dBm	667.0	mA
	WCDMA B2 HSDPA @ 22.00 dBm	706.0	mA
	WCDMA B2 HSUPA @ 21.98 dBm	715.0	mA
	WCDMA B5 HSDPA @ 22.90 dBm	617.0	mA
	WCDMA B5 HSUPA @ 22.66 dBm	633.0	mA
	WCDMA B8 HSDPA @ 21.59 dBm	624.0	mA
	WCDMA B8 HSUPA @ 21.37 dBm	654.0	mA

LTE data transfer (GNSS OFF)	LTE-FDD B1 @ 23.36 dBm	938.0	mA
	LTE-FDD B2 @ 23.18 dBm	953.0	mA
	LTE-FDD B3 @ 23.13 dBm	814.0	mA
	LTE-FDD B4 @ 23.25 dBm	778.0	mA
	LTE-FDD B5@ 23.06 dBm	697.0	mA
	LTE-FDD B7 @ 23.17 dBm	886.0	mA
	LTE-FDD B8 @ 22.89 dBm	852.0	mA
	LTE-FDD B28 @ 22.55 dBm	939.0.	mA
	LTE-TDD B40 @ 23.27 dBm	421.0	mA
GSM voice call	GSM850 PCL = 5 @ 32.40 dBm	322.0	mA
	EGSM900 PCL = 5 @ 33.58 dBm	379.0	mA
	DCS1800 PCL = 0 @ 29.45 dBm	182.0	mA
	PCS1900 PCL = 0 @ 29.56 dBm	195.0	mA
WCDMA voice call	WCDMA B1 @ 22.15 dBm	714.0	mA
	WCDMA B2 @ 22.77 dBm	780.0	mA
	WCDMA B5 @ 23.16 dBm	658.0	mA
	WCDMA B8 @ 22.62 dBm	698.0	mA

Table 43: Power Consumption of EC21-EUX Mini PCIe

Description	Conditions	Typ.	Unit
Sleep state	**AT+CFUN=0** (USB Disconnected)	3.1	mA
	AT+CFUN=0 (USB Suspend)	3.3	mA
	EGSM900 CH62 DRX = 2 (USB Disconnected)	4.3	mA
	EGSM900 CH62 DRX = 5 (USB Disconnected)	3.8	mA
	EGSM900 CH62 DRX = 9 (USB Disconnected)	3.5	mA

	DCS1800 698 DRX = 2 (USB Disconnected)	4.4	mA
	DCS1800 698 DRX = 5 (USB Disconnected)	3.8	mA
	DCS1800 698 DRX = 9 (USB Disconnected)	3.5	mA
	WCDMA PF = 64 (USB Disconnected)	4.4	mA
	WCDMA PF = 128 (USB Disconnected)	3.9	mA
	FDD-LTE PF = 64 (USB Disconnected)	4.5	mA
	FDD-LTE PF = 128 (USB Disconnected)	3.8	mA
Idle state	EGSM900 CH62 DRX = 5 (USB Disconnected)	21.9	mA
	EGSM900 CH62 DRX = 5 (USB Active)	25.4	mA
	WCDMA PF = 64 (USB Disconnected)	22.2	mA
	WCDMA PF = 64 (USB Active)	35.7	mA
	LTE-FDD PF = 64 (USB Disconnected)	22.6	mA
	LTE-FDD PF = 64 (USB Active)	36.0	mA
GPRS data transfer (GNSS OFF)	EGSM900 4DL/1UL @ 32.3 dBm	292.2	mA
	EGSM900 3DL/2UL @ 31.6 dBm	488.9	mA
	EGSM900 2DL/3UL @ 29.7 dBm	576.5	mA
	EGSM900 1DL/4UL @ 28.8 dBm	682.8	mA
	DCS1800 4DL/1UL @ 29.7 dBm	191.6	mA
	DCS1800 3DL/2UL @ 29.1 dBm	318.2	mA
	DCS1800 2DL/3UL @ 27.3 dBm	393.0	mA
	DCS1800 1DL/4UL @ 26.2 dBm	476.6	mA
EDGE data transfer (GNSS OFF)	EGSM900 4DL/1UL PCL = 8 @ 25.6 dBm	203.3	mA
	EGSM900 3DL/2UL PCL = 8 @ 25.2 dBm	356.3	mA
	EGSM900 2DL/3UL PCL = 8 @ 23.4 dBm	488.0	mA
	EGSM900 1DL/4UL PCL = 8 @ 22.6 dBm	620.2	mA

	DCS1800 4DL/1UL PCL = 2 @ 25.6 dBm	169.6	mA
	DCS1800 3DL/2UL PCL = 2 @ 25.6 dBm	287.3	mA
	DCS1800 2DL/3UL PCL = 2 @ 22.9 dBm	393.5	mA
	DCS1800 1DL/4UL PCL = 2 @ 22.4 dBm	506.5	mA
WCDMA data transfer (GNSS OFF)	WCDMA B1 HSDPA @ 22.8 dBm	636.0	mA
	WCDMA B1 HSUPA @ 22.6 dBm	691.0	mA
	WCDMA B8 HSDPA @ 22.1 dBm	633.2	mA
	WCDMA B8 HSUPA @ 21.8 dBm	667.8	mA
LTE data transfer (GNSS OFF)	LTE-FDD B1 @ 23.2 dBm	796.7	mA
	LTE-FDD B3 @ 23.0 dBm	875.1	mA
	LTE-FDD B7 @ 23.5 dBm	1026.7	mA
	LTE-FDD B8 @ 23.2 dBm	843.2	mA
	LTE-FDD B20 @ 22.9 dBm	878.1	mA
	LTE-TDD B28A @ 23.0 dBm	1023.4	mA
GSM voice call	EGSM900 PCL = 5 @ 32.2 dBm	308.2	mA
	DCS1800 PCL = 0 @ 29.7 dBm	207.0	mA
WCDMA voice call	WCDMA B1 @ 22.8 dBm	641.4	mA
	WCDMA B8 @ 22.6 dBm	657.6	mA

Table 44: GNSS Power Consumption of EC21 Series Mini PCIe Module

Description	Conditions	Typ.	Unit
Searching (**AT+CFUN=0**)	Cold start @ Passive antenna	75.0	mA
	Lost state @ Passive antenna	74.0	mA
Tracking (**AT+CFUN=0**)	Instrument environment	44.0	mA
	Open sky @ Passive antenna	53.0	mA

	Open sky @ Active antenna	58.0	mA

6.8. Thermal Dissipation

In order to achieve better performance of the module, it is recommended to comply with the following principles for thermal consideration:

- On customers' PCB design, please keep placement of the PCI Express Mini Card away from heating sources.
- Do not place components on the PCB area where the module is mounted, in order to facilitate adding of heatsink.
- Do not apply solder mask on the PCB area where the module is mounted, so as to ensure better heat dissipation performance.
- The reference ground of the area where the module is mounted should be complete, and add ground vias as many as possible for better heat dissipation.
- Add a heatsink on the top of the module and the heatsink should be designed with as many fins as possible to increase heat dissipation area. Meanwhile, a thermal pad with high thermal conductivity should be used between the heatsink and module.
- Add a thermal pad with appropriate thickness at the bottom of the module to conduct the heat to PCB.

The following figure shows the referenced heatsink design.

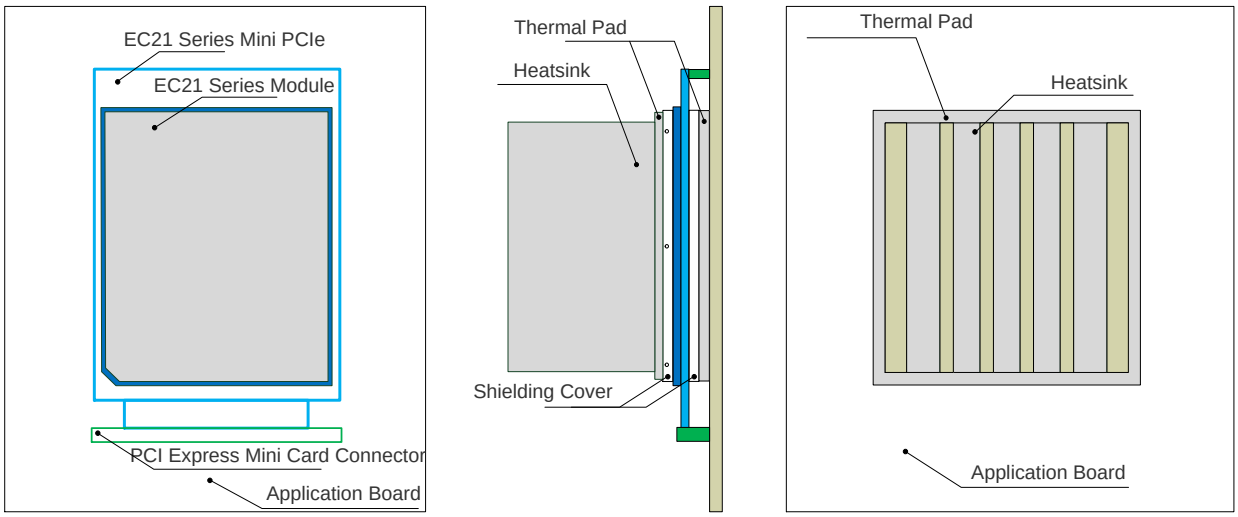

Figure 18: Referenced Heatsink Design

NOTE

1. The module offers the best performance when the internal BB chip stays below 105 °C. When the maximum temperature of the BB chip reaches or exceeds 105 °C, the module works normal but provides reduced performance (such as RF output power, data rate, etc.). When the maximum BB chip temperature reaches or exceeds 115 °C, the module will disconnect from the network, and it will recover to network connected state after the maximum temperature falls below 115 °C. Therefore, the thermal design should be maximally optimized to make sure the maximum BB chip temperature always maintains below 105 °C. Customers can execute **AT+QTEMP** and get the maximum BB chip temperature from the first returned value.
2. For more detailed guidelines on thermal design, see ***document [4]***.

6.9. Notification

Please follow the principles below in module application.

6.9.1. Coating

If a conformal coating is necessary for the module, do NOT use any coating material that may chemically react with the PCB or shielding cover, and prevent the coating material from flowing into the module.

6.9.2. Cleaning

Avoid using ultrasonic technology for module cleaning since it can damage crystals inside the module.

7 Mechanical Information

7.1. General Description

This chapter mainly describes mechanical dimensions as well as packaging specification of EC21 series Mini PCIe module. All dimensions are measured in millimeter (mm), and the dimensional tolerances are ±0.2 mm unless otherwise specified.

7.2. Mechanical Dimensions

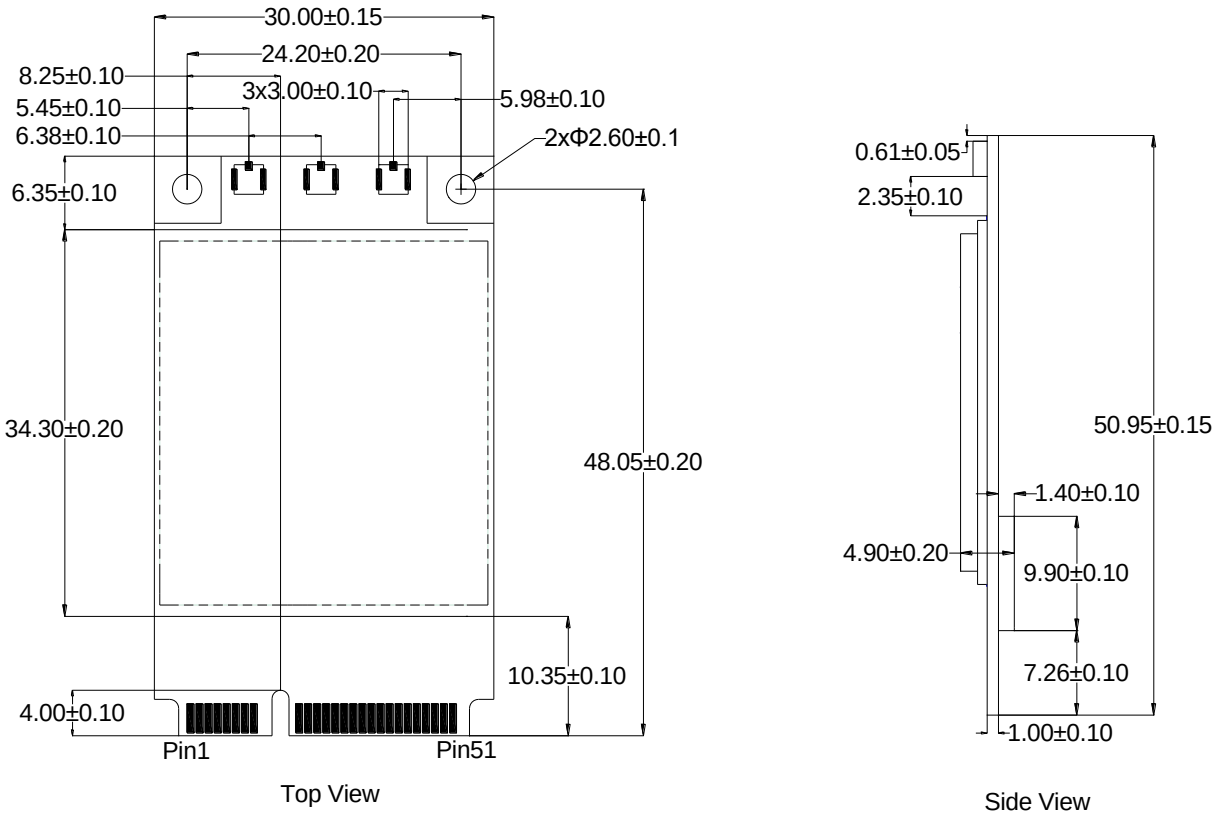

Figure 19: Mechanical Dimensions of EC21 Series Mini PCIe

NOTE

The package warpage level of the module conforms to the *JEITA ED-7306* standard.

7.3. Standard Dimensions of Mini PCI Express

The following figure shows the standard dimensions of Mini PCI Express. See *PCI Express Mini Card Electromechanical Specification Revision 1.2* for Detail A and Detail B.

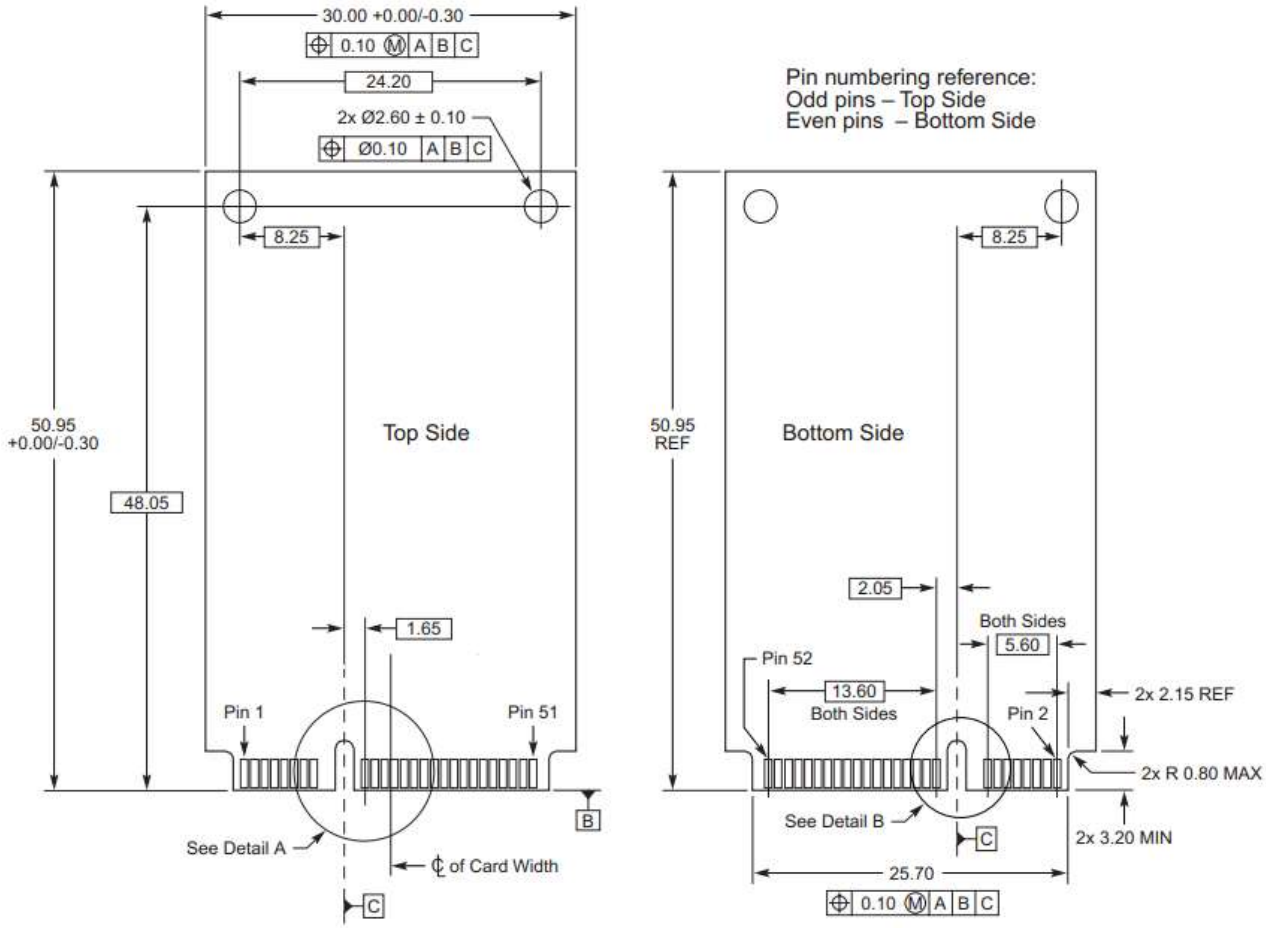

Figure 20: Standard Dimensions of Mini PCI Express

EC21 series Mini PCIe adopts a standard Mini PCI Express connector which compiles with the directives and standards listed in the *PCI Express Mini Card Electromechanical Specification Revision 1.2*. The following figure takes the Molex 679105700 as an example.

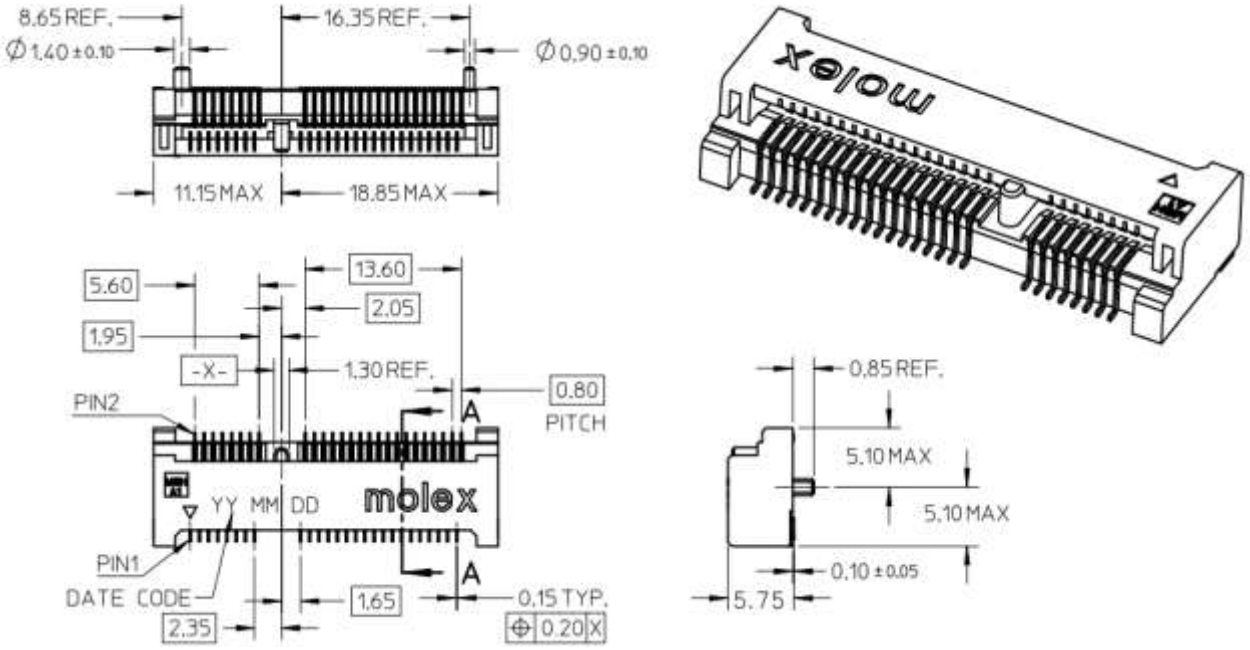

Figure 21: Dimensions of the Mini PCI Express Connector (Molex 679105700)

7.4. Packaging Specifications

The module adopts blister tray packaging and details are as follow:

7.4.1. Blister Tray

Dimension details are as follow:

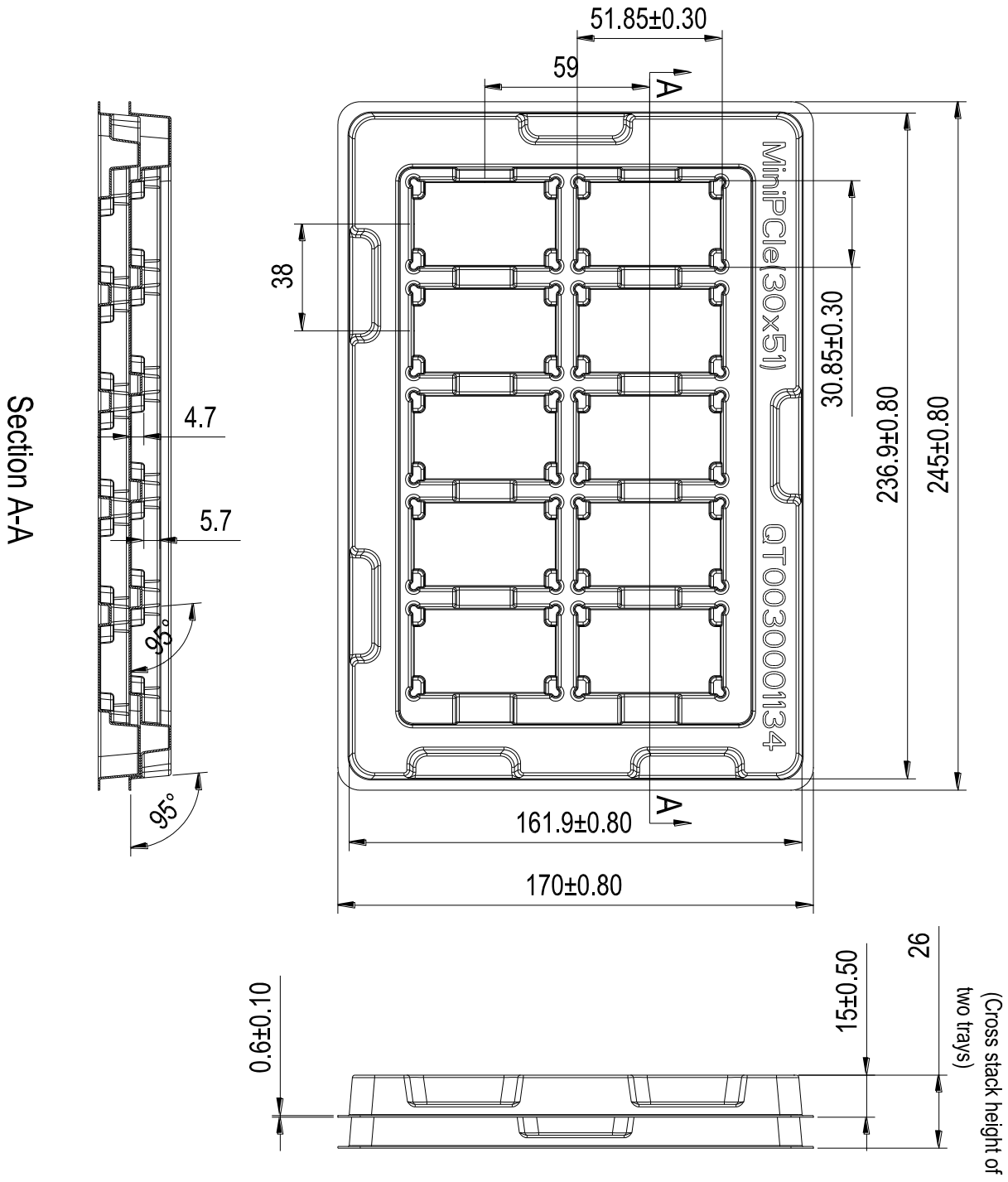

Figure 22: Blister Tray Dimension Drawing

7.4.2. Packaging Process

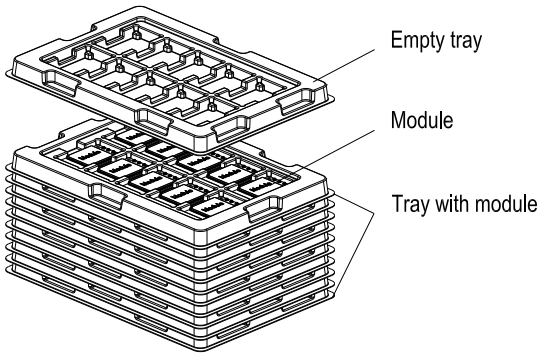

Each blister tray packs 10 modules. Stack 10 blister trays with modules together, and put 1 empty blister tray on the top.

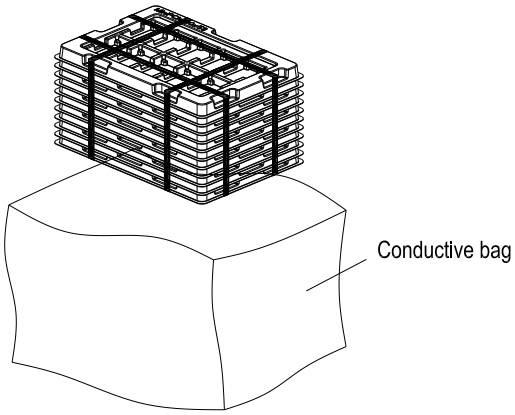

Packing 11 blister trays together and then put blister trays into conductive bag, seal and pack the conductive bag.

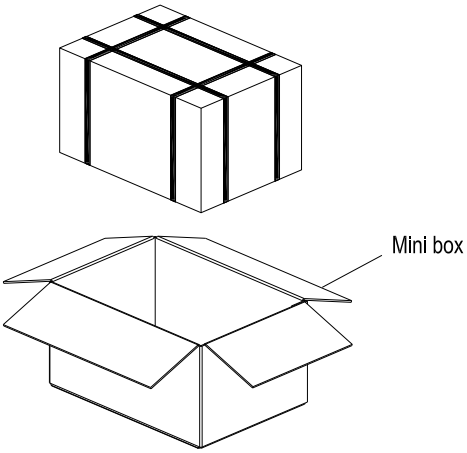

Put the seal-packed blister trays into the mini box. 1 mini box can pack 100 modules.

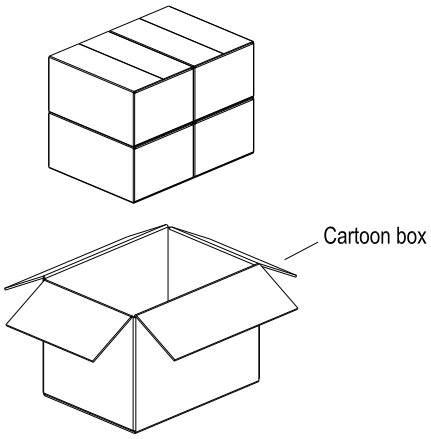

Put 4 packaged mini boxes into 1 cartoon box and then seal it. 1 cartoon box can pack 400 modules.

Figure 23: Packaging Process

8 Appendix References

Table 45: Related Documents

Document Name
[1] Quectel_EC2x&EG9x&EG2x-G&EM05_Series_AT_Commands_Manual
[2] Quectel_EC2x&EG9x&EG2x-G&EM05_Series_QCFG_AT_Commands_Manual
[3] Quectel_EC2x&EG9x&EG2x-G&EM05_Series_GNSS_Application_Note
[4] Quectel_LTE_Module_Thermal_Design_Guide

Table 46: Terms and Abbreviations

Abbreviation	Description
AMR	Adaptive Multi-rate
bps	Bits Per Second
CHAP	Challenge Handshake Authentication Protocol
CMUX	Connection Multiplexing
CS	Coding Scheme
CTS	Clear to Send
DCE	Data Communications Equipment
DC-HSPA+	Dual-carrier High Speed Packet Access
DCS	Digital Communication System
DFOTA	Delta Firmware Upgrade Over the Air
DL	Down Link

DTE	Data Terminal Equipment
DTR	Data Terminal Ready
EDGE	Enhanced Data Rates for GSM Evolution
EFR	Enhanced Full Rate
EGSM	Enhanced GSM
EMI	Electro Magnetic Interference
ESD	Electrostatic Discharge
ESR	Equivalent Series Resistance
FDD	Frequency Division Duplexing
FR	Full Rate
FTPS	FTP over SSL
GLONASS	GLObalnaya Navigatsionnaya Sputnikovaya Sistema, the Russian Global Navigation Satellite System
GMSK	Gaussian Minimum Shift Keying
GNSS	Global Navigation Satellite System
GPS	Global Positioning System
GSM	Global System for Mobile Communications
HR	Half Rate
HSPA	High Speed Packet Access
HSDPA	High Speed Downlink Packet Access
HSUPA	High Speed Uplink Packet Access
HTTP	Hypertext Transfer Protocol
HTTPS	Hypertext Transfer Protocol Secure
kbps	Kilo Bits Per Second
LED	Light Emitting Diode
LTE	Long-Term Evolution

Mbps	Million Bits Per Second
MCS	Modulation and Coding Scheme
MCU	Micro Control Unit
ME	Mobile Equipment
MIMO	Multiple-Input Multiple-Output
MMS	Multimedia Messaging Service
MO	Mobile Originated
MQTT	Message Queuing Telemetry Transport
MT	Mobile Terminated
NMEA	National Marine Electronics Association
PAP	Password Authentication Protocol
PCM	Pulse Code Modulation
PDA	Personal Digital Assistant
PDU	Protocol Data Unit
PIFA	Planar Inverted F Antenna
PING	Packet Internet Groper
POS	Point of Sale
PPP	Point-to-Point Protocol
QAM	Quadrature Amplitude Modulation
QPSK	Quadrature Phase Shift Keying
QZSS	Quasi-Zenith Satellite System
RF	Radio Frequency
RHCP	Right Hand Circularly Polarized
RoHS	Restriction of Hazardous Substances
RTS	Ready To Send

Rx	Receive
SIMO	Single Input Multiple Output
SMS	Short Message Service
SMTP	Simple Mail Transfer Protocol
SMTPS	Simple Mail Transfer Protocol Secure
TCP	Transmission Control Protocol
TDD	Time Division Duplexing
TDMA	Time Division Multiple Access
TD-SCDMA	Time Division-Synchronous Code Division Multiple Access
TX	Transmitting Direction
TVS	Transient Voltage Suppressor
UART	Universal Asynchronous Receiver & Transmitter
UL	Uplink
URC	Unsolicited Result Code
USB	Universal Serial Bus
(U)SIM	(Universal) Subscriber Identification Module
VSWR	Voltage Standing Wave Ratio
WCDMA	Wideband Code Division Multiple Access
WLAN	Wireless Local Area Network